00005217:99900758: 20100322

Model 5217 Crane

Volume 2 - PARTS AND SPECIFICATIONS

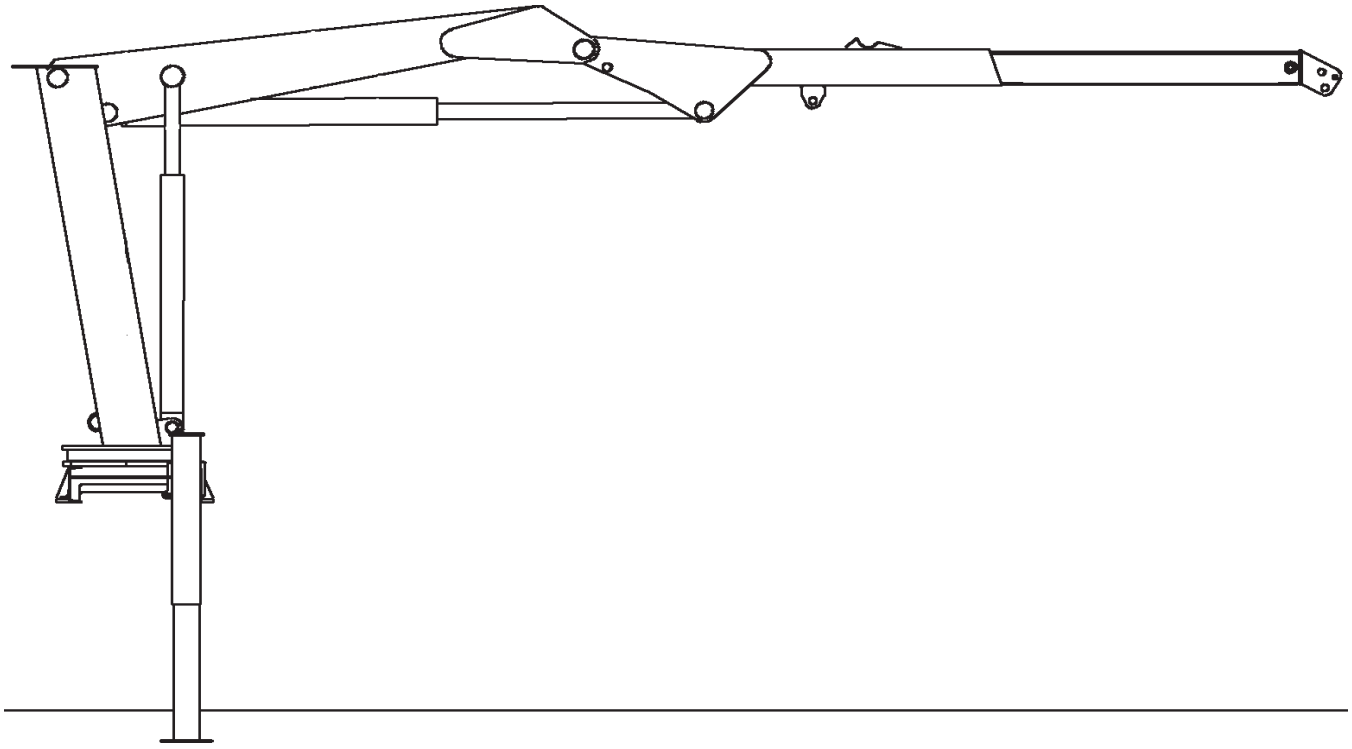

IOWA MOLD TOOLING CO., INC.
BOX 189, GARNER, IA 50438-0189
TEL: 641-923-3711

MANUAL PART NUMBER 99900758

Iowa Mold Tooling Co., Inc. is an Oshkosh Corporation company.

00005217:99900758: --------

REVISIONS LIST

DATE	LOCATION	DESCRIPTION OF CHANGE
20001102	2-5	REV SPL
	3-9	ECN8615-41710920-CHG INNER CYL PN
	3-10	REPLACE INNER CYL ASM (NEW CBAL VALVE)
20010430	3-22,23	REPLACED 77041014 WITH 77041345 TOGGLE SWITCH
20010523	3/25	ADDED #5 AND #15; REVISED #6 QTY 8 WAS 12
20011204	3-27	ECN 8834 - ADDED LIGHT KIT OPTION
20020318	3-20,21	RMV HYDRAULIC SHUTDOWN SYSTEM
	3-19	ECN 8886 - ADDED CAP OVERLOAD SYSTEM - 2800 PSI
20030109	1-3,5	ECN 9066 - CHANGES TO HOOK APPROACH - HORIZONTAL WAS 2-9"; CHANGED TO 2'-11". VERTICAL WAS 7'-2"; CHANGED TO 7'-2.5"
20030327	3-9,10	ECN 9130 - CHANGED INNER BOOM ASM FROM 41710920 TO 41718078 AND INNER BOOM CYL FROM 3B270000 TO 51718058
20040527	3-10,12	ECN 9468, 9501 - ROD CHANGE ON 51718058, 3C180920
20051107	3-4-6,10-15	ECN 9832 - CYLINDER 71411814 REPL. 3B221850; 71411815 REPL 3C180920; 71411816 REPL 51718058
20060616	3-4,9,11	ECN 9832-2 - REVERSED CYLINDER CHANGE
20061020	1-1, 3-3	NEW OWNERSHIP STATEMENT; UPDATED SERIAL TAG LOCATION INFO.
20070816	3-4, 17,23	ECN 10539 - LONGER NYLOC NUTS ON 31713709, 41712219; ECN 10523 - CLAMP 72661642 WAS 72066516
20071129	3-18	ECN 10629 - UPDATED DRAWING FOR 91708398
20081104	3-18	ECN10762 - CHANGE FROM 8-SECTION TO 6-SECTION VALVEBANK, REVISE FUNCTION LAYOUT
	3-4	ECN 10767 - 71056627 IN 41712219 WAS 71056361
20100322	3-18,23	ECN 11134-2 - 91708398 - VB 73734514 WAS 73734071
		ECN 10779 - REV 91708398, 31713709

INTRODUCTION

This volume deals with information applicable to your particular crane. For operating, maintenance and repair instructions, refer to Volume 1, OPERATION, MAINTENANCE AND REPAIR.

We recommend that this volume be kept in a safe place in the office.

This manual is provided to assist you with ordering parts for your IMT truck-mounted articulating crane. It also contains additional instructions regarding your particular installation.

It is the user's responsibility to maintain and operate this unit in a manner that will result in the safest working conditions possible.

Warranty of this unit will be void on any part of the unit subjected to misuse due to overloading, abuse, lack of maintenance and unauthorized modifications. No warranty - verbal, written or implied - other than the official, published IMT new machinery and equipment warranty will be valid with this unit.

In addition, it is also the user's responsibility to be aware of existing Federal, State and Local codes and regulations governing the safe use and maintenance of this unit. Listed below is a publication that the user should thoroughly read and understand.

ANSI/ASME B30.22
ARTICULATING BOOM CRANES
The American Society of Mechanical Engineers
United Engineering Center
345 East 47th Street
New York, NY 10017

Three means are used throughout this manual to gain the attention of personnel. They are NOTE's, CAUTION's and WARNING's and are defined as follows:

NOTE

A NOTE is used to either convey additional information or to provide further emphasis for a previous point.

CAUTION

A CAUTION is used when there is the very strong possibility of damage to the equipment or premature equipment failure.

WARNING

A WARNING is used when there is the potential for personal injury or death.

Treat this equipment with respect and service it regularly. These two things can add up to a safer working environment.

Read and familiarize yourself with the IMT OPERATOR'S CRANE SAFETY MANUAL before operating or performing any maintenance on your crane.

NOTES

SECTION 1. 5217 CRANE SPECIFICATIONS

NOTES

5217 CRANE SPECIFICATIONS

GENERAL SPECIFICATIONS

***CRANE RATING (ANSI B30.22)**	52300 ft-lbs
***MAXIMUM CRANE RATING**	52300 ft-lbs
HORIZONTAL REACH from centerline of rotation	17'-5"
HYDRAULIC EXTENSION	48"
MANUAL EXTENSION	None
VERTICAL REACH from mounting surface	24'-1"
VERTICAL REACH from ground / 40" frame ht.	27'-5"
CRANE WEIGHT	2890 lbs
OUTRIGGER SPAN	12'-4"
OUTRIGGER PADS	12" x 12"
CRANE STORAGE HEIGHT from mounting surface	7'-0"
CRANE STORAGE HEIGHT from ground / 40" frame ht.	10'-4"
****MOUNTING SPACE REQUIRED**	28"
ROTATIONAL TORQUE	7800 ft-lbs
OPTIMUM PUMP CAPACITY	9 U.S. GPM
SYSTEM OPERATING PRESSURE	2500 PSI
OIL RESERVOIR CAPACITY	17 U.S. Gallons
HOOK APPROACH - HORIZONTAL from centerline of rotation	2'-11"
HOOK APPROACH - VERTICAL from mounting surface	7'-2-1/2"

* Maximum Crane Rating (ft-lbs) is defined as that rated load (lbs) which when multiplied by its respective distance (ft) from centerline of rotation gives the greatest ft-lb value.

ANSI B30.22 Crane Rating (ft-lbs) = With all extensions retracted and inner plus outer boom in a horizontal position, rated load (lbs) X respective distance (ft) from centerline of rotation = nominal ft-lb value.

** Allow an additional 5" between the cab and crane base for swing clearance.

IOWA MOLD TOOLING CO., INC.
BOX 189, GARNER, IA 50438-0189
TEL: 641-923-3711 FAX: 641-923-2424

PERFORMANCE CHARACTERISTICS

ROTATION:	450°	30 seconds
INNER BOOM ELEVATION:	-49° to +77°	24 seconds
OUTER BOOM ARTICULATION:	139°	21 seconds
EXTENSION BOOM:	48"	7 seconds
VERTICAL OUTRIGGER STROKE:	24"	6 seconds

POWER SOURCE

Integral-mounted hydraulic pump and PTO application. Other standard power sources may be utilized - minimum power required is 15 horsepower.

CYLINDER HOLDING VALVES

The holding sides of all standard cylinders are equipped with integral-mounted holding or counter-balance valves to prevent sudden cylinder collapse in case of hose or other hydraulic failure. The outrigger cylinders have positive, pilot-operated holding valves that open only on command.The inner cylinders have single pilot-operated counter balance valves while the outer and extension boom cylinders have double counter-balance valves. The counter-balance valve serves several functions. First, it is a holding valve. Secondly, it is so constructed that it will control the lowering function and allow that motion to be feathered while under load. Finally, if a hose breaks, the only oil loss will be that in the hose.

ROTATION SYSTEM

Rotation of the crane is accomplished through a turntable bearing, powered by a high torque hydraulic motor through a ring and pinion type spur gear train. Total gear reduction is 39.61 : 1.

HYDRAULIC SYSTEM

The hydraulic system is an open centered, full pressure system, requiring 9 GPM optimum oil flow, at 2500 PSI. Eight-spool, stack-type control valve, six of which are used for the standard crane and the remaining two are plugged, but easily adapted for additional optional features. Dual operational handles for six functions are located at both sides of crane for convenient operation. System includes hydraulic oil reservoir, suction-line strainer, pump, 8-section control valve, return-line filter and all hoses and fittings.

IMT reserves the right to change specifications and design without notice.

GEOMETRIC CONFIGURATION

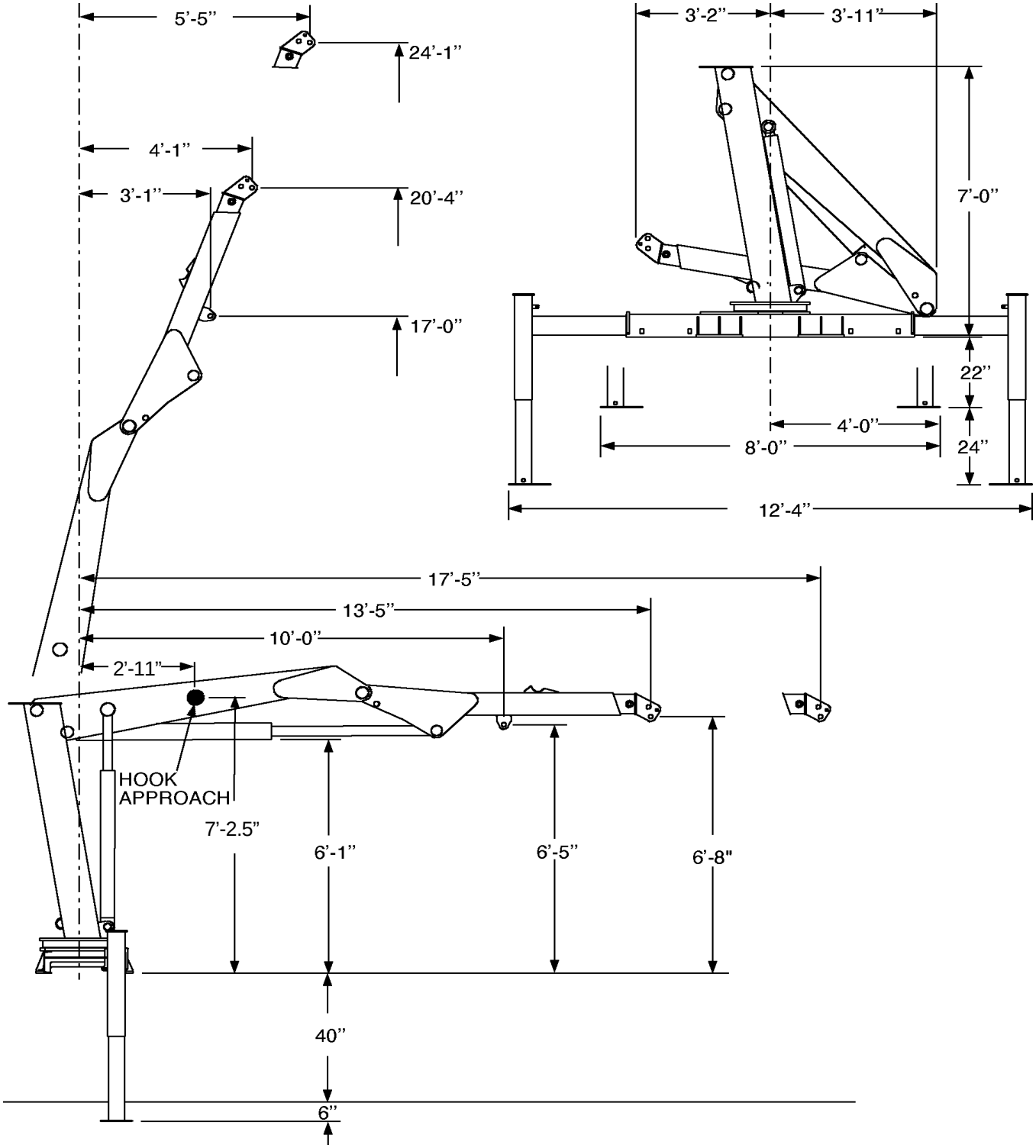

IOWA MOLD TOOLING CO., INC. ● BOX 189 ● GARNER ● IA ● 50438 ● 641-923-3711

Capacities through geometric range are limited to those shown in horizontal position.

MODEL 5217 CRANE

- **Loads shown are based on crane structural or hydraulic capability. Before lift is made, stability must be checked per SAE J765A.**
- **Working loads will be limited to those shown. Deduct the weight of load handling devices.**
- **Winch lifting capacity is limited to those shown - Maximum 4000 LBS for 1-part line.**

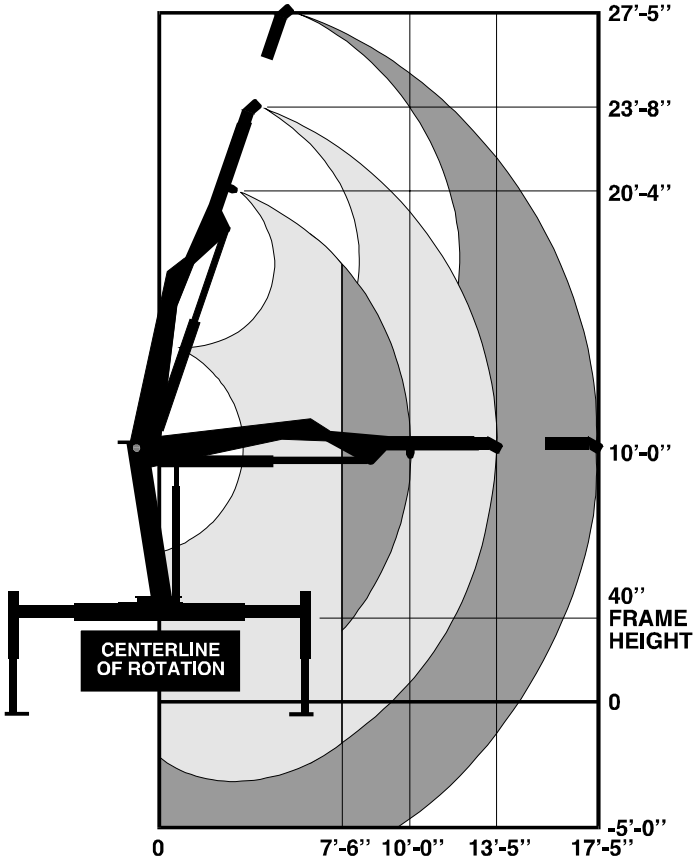

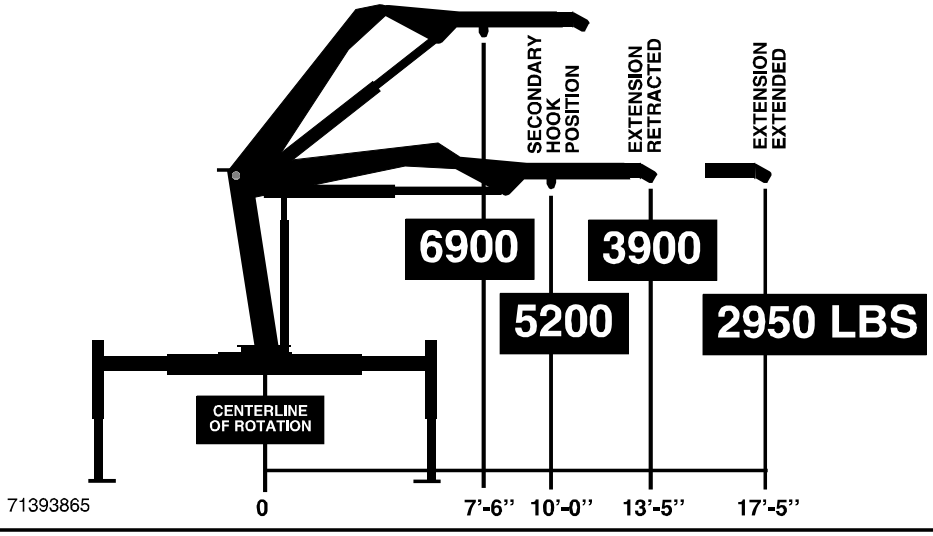

71393865

MINIMUM CHASSIS SPECIFICATIONS FOR STANDARD 5217 CRANE

Crane Mount	Behind Cab
Crane Working Area	360°
Chassis Style	Conventional Cab
Front Axle Rating (GAWR)	7000 lbs
Rear Axle Rating (GAWR)	Single Axle 14,000 lbs
Wheelbase	171"
Cab-to-axle	102"
Outigger Width Required	12'-4"
RBM	720,000 in-lbs
Frame Section Modulus	14.4 cubic inches
Frame Yield Strength	50,000 psi
Minimum Finished Unit Weight To Maintain Vehicle Stability	
Front Axle	* 4900 lbs
Rear Axle	* 5400 lbs
Total Finished Unit Wt.	10300 lbs

* Allows lifting full capacity load in a 360° arc when crane is installed immediately behind the cab. Great care should be taken when swinging the load from rear of vehicle to front of vehicle since the front axle springs will compress, thus affecting the levelness of the vehicle.

FIGURE A.
360° WORKING AREA

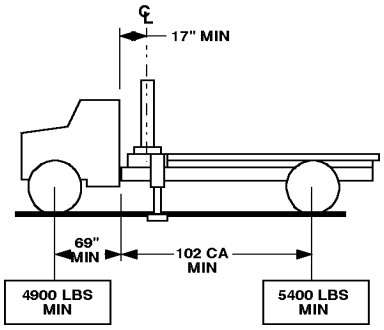

NOTES:

1. GAWR means Gross Axle Weight Rating and is dependent on all components of the vehicle such as axles, tires, wheels, springs, brakes, steering and frame strength meeting the manufacturer's recommendations. Always specify GAWR when purchasing a truck.

2. Minimum axle requirements may increase with use of diesel engines, longer wheelbase or service bodies. Contact the factory for further information.

3. Weight distribution calculations are required to determine final axle loading.

4. All chassis and crane combinations must be stability tested to ensure stability per ANSI B30.22

IOWA MOLD TOOLING CO., INC.
BOX 189, GARNER, IA 50438-0189
TEL: 641-923-3711
FAX: 641-923-2424

SECTION 2. 5217 CRANE REFERENCE

NOTES

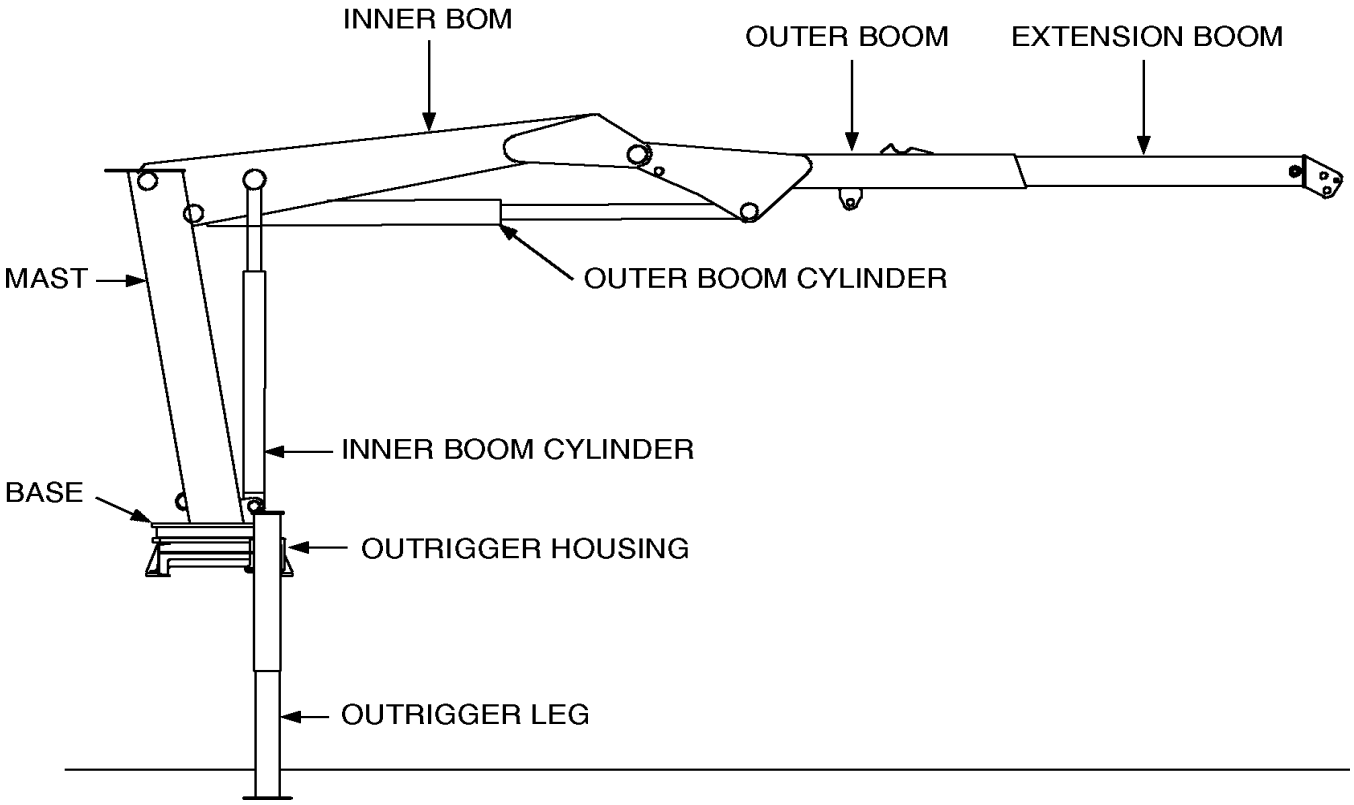

MAJOR CRANE ASSEMBLIES

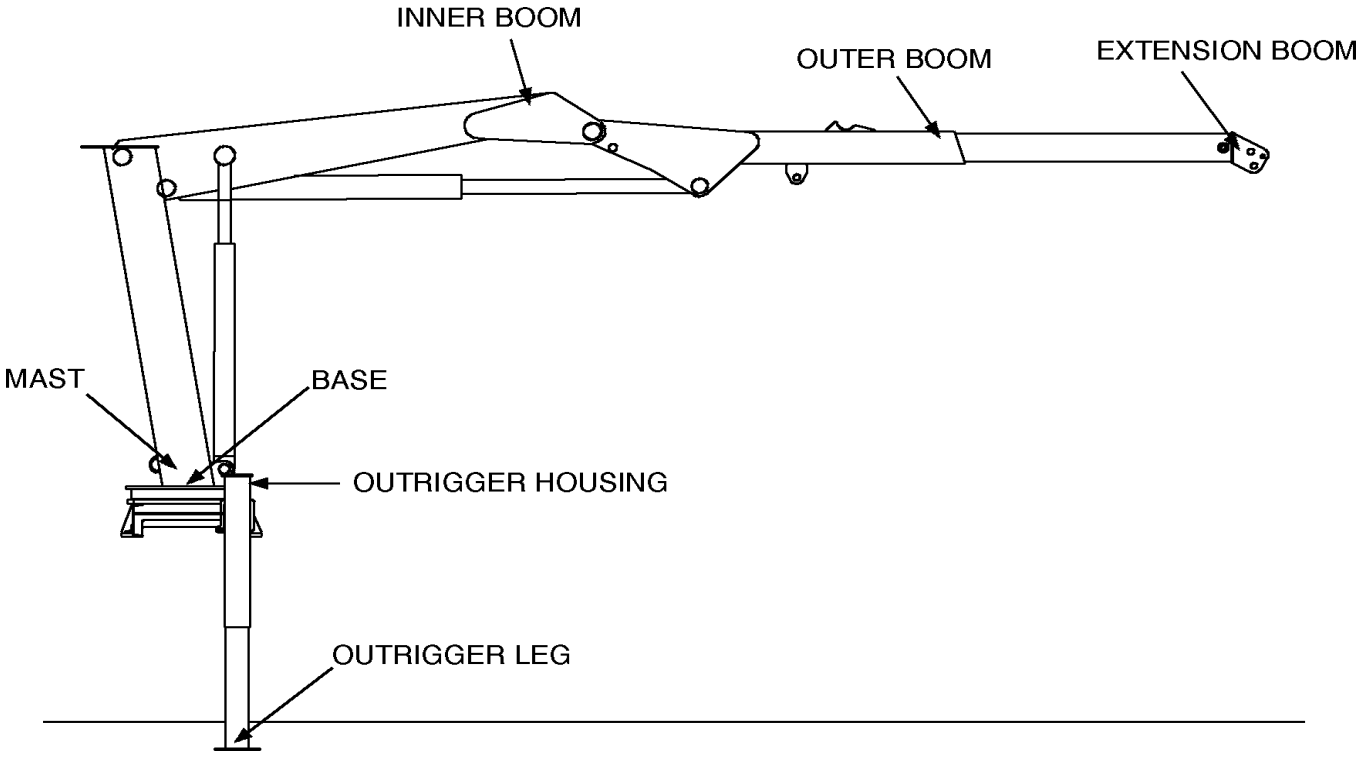

WELDMENT PART NUMBER LOCATIONS

GREASE ZERK LOCATIONS & LUBRICANT REQUIREMENTS

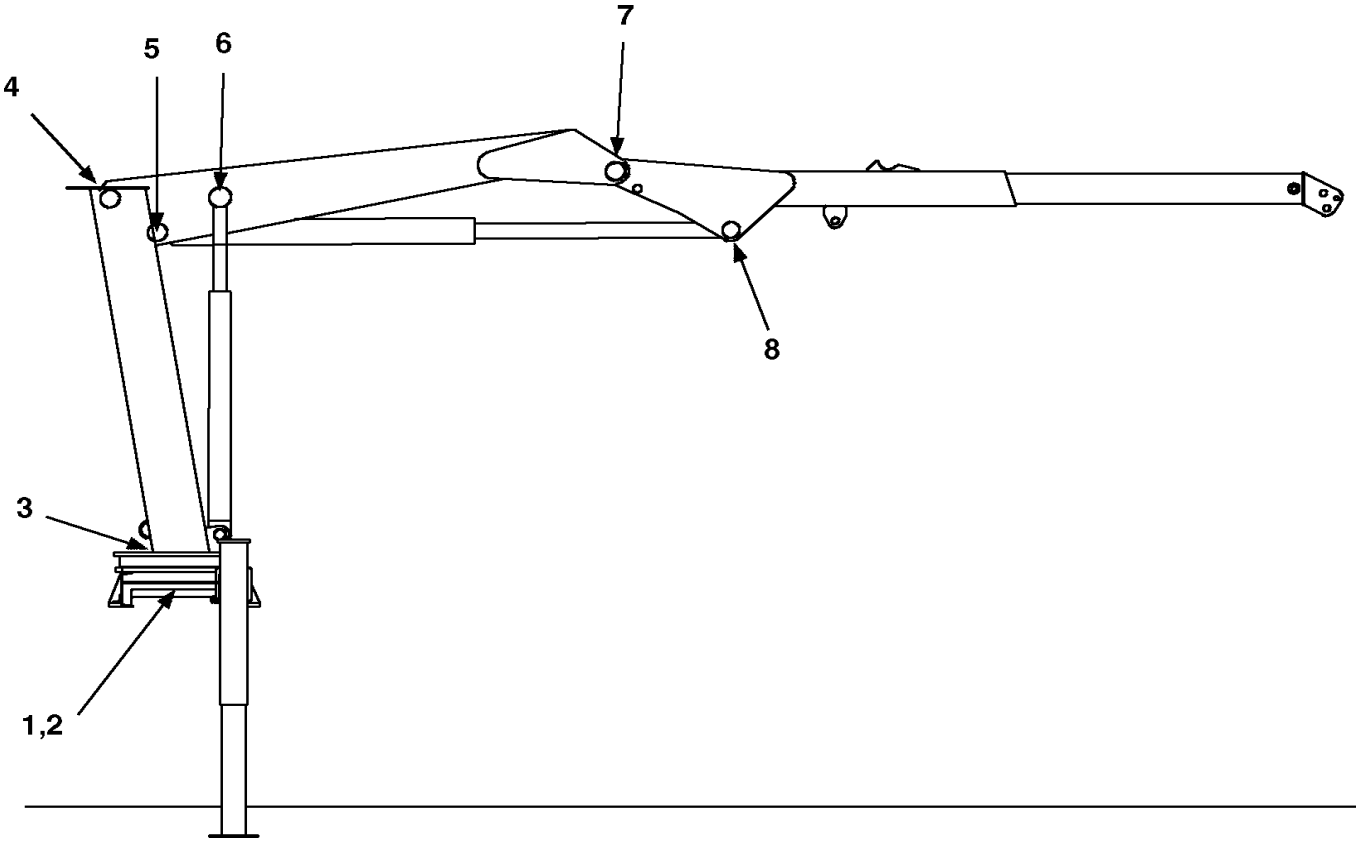

ITEM	LOCATION DESCRIPTION	LUBRICANT	FREQUENCY
1.	DRIVE GEAR GREASE EXTENSION	SHELL ALVANIA 2EP OR SHELL RETINAX “A”	WEEKLY
2.	TURNTABLE/BEARING GREASE EXTENSION *ROTATE CRANE WHILE GREASING		
3.	PINION GEAR		
4.	MAST/INNER BOOM HINGE PIN		
5.	OUTER CYLINDER BASE		
6.	INNER CYLINDER ROD		
7.	INNER BOOM/OUTER BOOM HINGE PIN		
8.	OUTER CYLINDER ROD		

NOTE: All application points must be greased weekly under normal work loads and moderate weather conditions. Under severe operating conditions, lubrication should be performed more frequently. See Volume 1; Operation, Maintenance and Repair for additional lubrication requirements.

RECOMMENDED SPARE PARTS LIST

1 YEAR SUPPLY
5217 CRANE
FOR MANUAL: 99900758

This spare parts list does not necessarily indicate that the items can be expected to fail in the course of a year. It is intended to provide the user with a stock of parts sufficient to keep the unit operating with the minimal down-time waiting for parts. There may be parts failures not covered by this list. Parts not listed are considered as not being Critical or Normal Wear items during the first year of operations and you need to contact the distributor or manufacturer for availability.

ASSEMBLY DESIGNATION	ITEM NO.	PART NO.	DESCRIPTION	QTY	CODE	SHELF LIFE (MO)	ORDER QTY
41712219.01.19960918	**BASE & MNL OUTRG ASM**						
	9	60020115	BUSHING	1	W		
	10	60020116	BUSHING	1	W		
	11	60020187	BUSHING	1	W		
	12	60020188	BUSHING	1	W		
	30	71056265	PINION GEAR	1	W		
	32	7Q072112	O-RING	2	W		
	54	73054538	COUNTERBALANCE VALVE	2	C		
3B221850.01.19950327	**POWER DOWN OUTRG CYLINDER**						
	5	73054004	LOCKING HOLDING VALVE	2	C		
	9	9B101214	SEAL KIT	2	W		
3B220850.01.19940417	**POWER OUT OUTRG CYLINDER**						
	13	9B050608	SEAL KIT	2	W		
41710870.01.19950426	**MAST ASM**						
	2	7BF81520	BUSHING	2	W		
41710920.01.19940417	**INNER BOOM ASM**						
	4	7BF81220	BUSHING	12	W		
3B270000.01.20001102	**INNER BOOM CYLINDER**						
	3	6I035125	PISTON	1	W		
	4	6H035025	HEAD	1	W		
	5	9C142020	SEAL KIT	1	W		
	16	73054887	COUNTERBALANCE VALVE	1	C		
	20	7BF81020	BUSHING	4	W		
41712218.01.19940415	**OUTER BOOM ASM**						
	6	7BF81220	BUSHING	4	W		
3C180920.01.19940415	**OUTER BOOM CYLINDER**						
	3	6I045143	PISTON	1	W		
	4	6H045030	HEAD	1	W		
	5	9C182423	SEAL KIT	1	W		
	15	73054242	COUNTERBALANCE VALVE	1	C		
	19	7BF81220	BUSHING	2	W		
	20	7BF81520	BUSHING	2	W		
41708396.01.19940415	**EXTENSION BOOM ASM**						
	12	60030064	WEAR PAD	1	W		
	13	60030067	WEAR PAD	1	W		
3B077880.01.19940415	**EXTENSION CYLINDER**						
	4	6H025015	HEAD	1	W		
	5	6I025087	PISTON	1	W		
	6	73054304	COUNTERBALANCE VALVE	2	C		
	7	9B101214	SEAL KIT	1	W		

NOTES

INSTALLATION

GENERAL

This section contains specific instructions for the installation of your crane. Prior to installing the crane and hydraulic components, make sure the chassis is ready to receive the crane (refer to VOLUME 1, Installation).

CRANE MOUNTING

1. See SPECIFICATIONS in Section 1 for crane weight. Using an overhead hoist and fabric slings of adequate capacity, lift the crane about a foot to see if the crane is adequately balanced. If not, lower hoist and adjust slings. Re-check balance and re-position crane until mounting surface is level.

2. Install the truck frame support so that the tie-down studs pass through the supports (figure below). Cut the support to the inside dimensions of the truck frame. Allow about 1/16" extra. Grind the end of the support to fit inside the frame channel. Use a hammer to drive it into position if necessary.

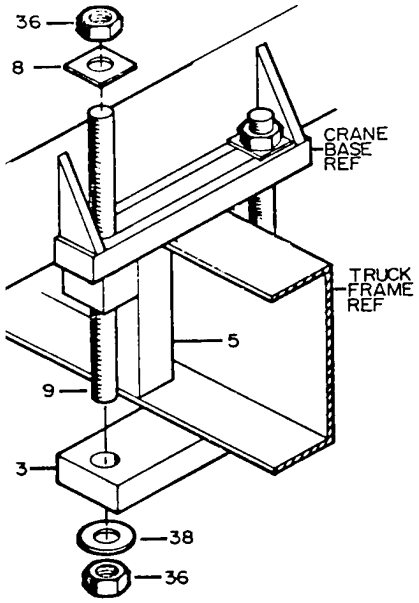

ITEM	DESCRIPTION	QTY
3.	CLAMP PLATE	4
5.	FRAME SUPPORT	4
8.	SQUARE WASHER	8
9.	TIE DOWN STUD	8
36.	LOCK NUT	16
38.	WASHER	8

CRANE INSTALLATION

3. Allow sufficient clearance between the cab and crane base, at least 5". Position the crane on the chassis per the applicable installation drawing, centering the mounting slots over the truck frame rails. While holding crane with hoist, start mounting hardware per figure below. Note position of support weldments on truck frame. Hand tighten nuts. Observe underside of crane base. No clearance between base and frame bars is allowed.

4. Torque the 1"-8 UNC Grade 5 mounting hardware to 442 ft-lbs (62 kg-m). When torquing the mounting hardware the following precautions must be followed:

A. Never use lock washers.

B. Hardened washers must be used, and under the turning element, whether the turning element is the nut or the head of the bolt.

C. Torque values specified are with residual oils or without special lubricants applied to the threads. If special lubricants are used, such as Never-Seize compound graphite and oil, molybdenum disulphite collodial copper or white lead, reduce torque values 10%. Torque values for threaded fasteners are not affected with the use of Loctite.

D. Do not use rusty fasteners, the rust will alter torque values significantly.

E. Touch-up paint around mounting anchor plates.

CAUTION

DO NOT ATTEMPT TO APPLY THE SAME TORQUE TO THE TIE ROD AND SELF-LOCKING NUTS AS SHOWN IN THE TORQUE DATA CHART. DO NOT EXCEED 442 FT. LBS. (62 KG-M). EXCEEDING THIS TORQUE VALUE COULD DAMAGE EITHER THE CHASSIS OR CRANE BASE.

POWER WRENCHING IS NOT RECOMMENDED UNTIL THE LEAD THREAD OF THE NUT INSERT IS ENGAGED BY HAND TURNING.

HYDRAULIC INSTALLATION

To install the hydraulic hoses, fittings, etc.:

1. Install the hydraulic reservoir on the crane base.

2. Plumb the suction-line filter as shown in figure below.

3. Install the 1-1/4" suction hose between the suction-line filter and the pump inlet. Tighten the hose clamps.

4. Install the 1/2" pressure hoses between the pump outlet and the inlet port on the valve bank.

5. Install the return filter and gate valve on the reservoir. Install the hose between the valve bank and return filter.

6. Fill the hydraulic reservoir to the “FULL” mark.

7. Open the gate valve at the suction-line filter.

CAUTION

FAILURE TO OPEN THE GATE VALVE WILL RESULT IN A DRY RUNNING PUMP WHICH MAY DAMAGE THE PUMP.

8. Open the return gate valve.

9. Start the vehicle’s engine and engage the PTO. Allow the system to run for about five minutes and then check the vacuum gauge on the suction-line filter (it should read 8" mercury or less). If the vacuum reading is too high, check to make certain that the gate valve is opened completely. If the valve is fully opened, check for a collapsed or restricted suction line.

10. Cycle all hydraulic functions. Check for leaks, and refill the reservoir if necessary.

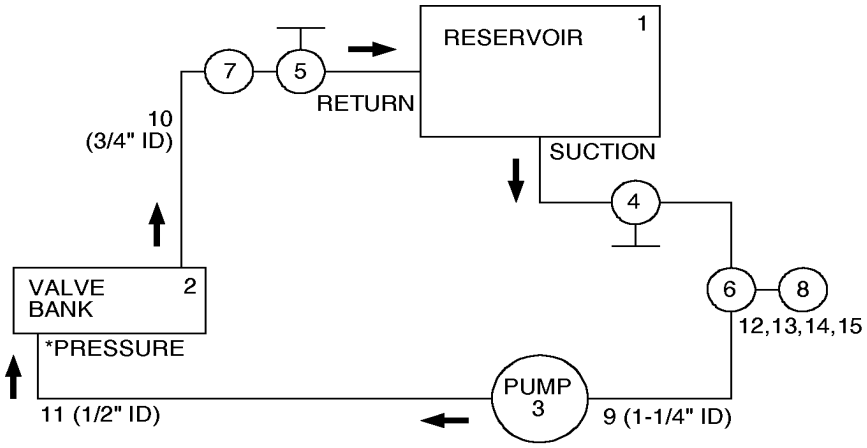

*PRESSURE SIDE OF VALVEBANK HAS RELIEF VALVE, RETURN DOES NOT.

ITEM	DESCRIPTION	QTY
1.	OIL RESERVOIR	1
2.	VALVE BANK	1
3.	PUMP	1
4.	GATE VALVE	1
5.	BALL VALVE	1
6.	SUCTION FILTER	1
7.	RETURN FILTER	1
8.	VACUUM GAUGE	1
9.	SUCTION HOSE	1
10.	RETURN HOSE	1
11.	PRESSURE HOSE	1
12.	OIL FILTER BRACKET	1
13.	SCREW	4
14.	NUT	2
15.	LOCK WASHER	4

HYDRAULIC INSTALLATION

SECTION 3. REPLACEMENT PARTS 5217 CRANE

NOTES

PARTS INFORMATION

GENERAL

This section contains the exploded parts drawings and accompanying parts lists for the assemblies used on this crane. These drawings are intended to be used in conjunction with the instructions found in the REPAIR section in Volume 1. For optional equipment such as winches and remote controls, refer to the appropriate service manual.

WARNING

DO NOT ATTEMPT TO REPAIR ANY COMPONENT WITHOUT READING THE INFORMATION CONTAINED IN THE REPAIR SECTION IN VOLUME 1. PAY PARTICULAR ATTENTION TO STATEMENTS MARKED WARNING, CAUTION, OR NOTE IN THAT SECTION. FAILURE TO COMPLY WITH THESE INSTRUCTIONS MAY RESULT IN DAMAGE TO THE EQUIPMENT, PERSONAL INJURY, OR DEATH.

CRANE IDENTIFICATION

Every IMT crane has an identification placard (see figure) attached to the inner boom, mast, or crane base. When ordering parts, communicating warranty information, or referring to the unit in correspondence, always include the serial number and model numbers. All inquiries should be addressed to:

Iowa Mold Tooling Co., Inc.
Box 189, Garner, IA 50438-0189
Telephone: 641-923-3711
Technical Support Fax: 641-923-2424

CYLINDER IDENTIFICATION

To insure proper replacement parts are received, it is necessary to specify the complete number/letter sequence for any part requested. Part numbers may be cross checked by comparing the stamped identification on the cylinder case (see figure below) against the information contained in the service manual. You must include the part number stamped on the cylinder case when ordering parts.

WELDMENT IDENTIFICATION

Each of the major weldments - base, mast, inner boom, outer boom, extension boom and outrigger weldments bear a stamped part number. Any time a major weldment is replaced, you must specify the complete part number as stamped on the weldment. The locations of the part numbers are shown in Section 2.

ORDERING REPAIR PARTS

When ordering replacement parts:

1. Give the model number of the unit.
2. Give the serial number of the unit.
3. Specify the complete part number. When ordering cylinder parts, or one of the main weldments, always give the stamped part number.
4. Give a complete description of the part.
5. Specify the quantity required.

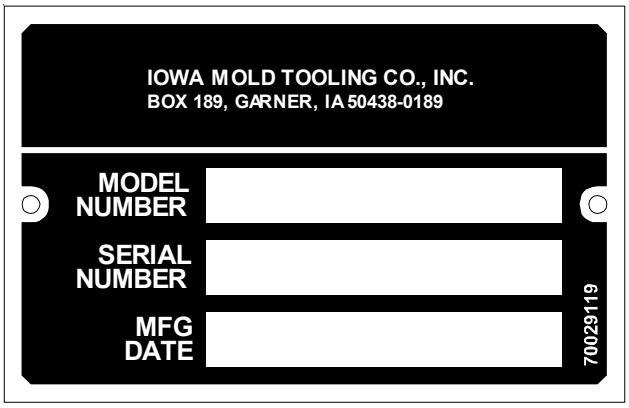

SERIAL NUMBER PLACARD

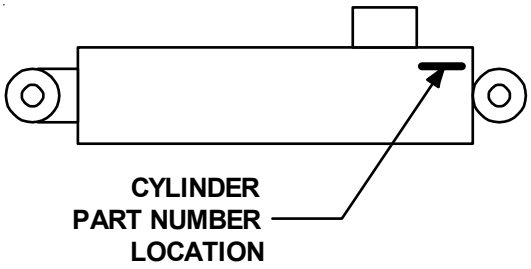

CYLINDER PART NUMBER LOCATION

BASE & MNL OUTRIGGER ASM (41712219)

ITEM	PART NO.	DESCRIPTION	QTY
1.	3B221850	OUTRIGGER CYLINDER	2
2.	99903611	INSTRUCTIONS, HYD SHUTDOWN	1REF
3.	70732573	RESERVOIR ASM	1
5.	71145016	SLIDING STOP BLOCK	1
7.	52070138	T-PIN	2
8.	52712217	BASE (INCL:9-13)	1
9.	60020115	BUSHING (PART OF 8)	1REF
10.	60020116	BUSHING (PART OF 8)	1REF
11.	60020187	BUSHING (PART OF 8)	1REF
12.	60020188	BUSHING (PART OF 8)	1REF
13.	71056011	DRIVE GEAR (PART OF 8)	1REF
14.	52712252	OUTRIGGER ARM	2
15.	52705871	OUTRIGGER LEG	2
16.	53000714	GREASE EXTENSION	1
17.	53000717	GREASE EXTENSION	1
18.	60107648	HOSE CLAMP	2
19.	60010235	PINION COVER	1
20.	60010351	SPRING	2
21.	60010844	GREASE PLATE	1
22.	60030053	ROLLER	4
23.	60102767	ACCESS COVER	1
24.	60106032	STUD 1/2-13 X 2	2
25.	60106314	PIN	4
26.	60106886	PINION SPACER	1
27.	60106968	PIN	2
28.	60102769	GEAR GUARD	1
29.	71056264	INTERMEDIATE GEAR	1
30.	71056265	PINION GEAR	1
31.	71056627	TURNTABLE GEAR BEARING	1
33.	72053301	COUPLING 1/8NPT	2
34.	72053508	ZERK 1/8NPT	3
35.	72060002	CAP SCR 1/4-20X3/4 HHGR5	2
36.	72060054	CAP SCR 3/8-16X3 HHGR5	2
37.	72060092	CAP SCR 1/2-13X1-1/4 HHGR5	2
38.	72060102	CAP SCR 1/2-13X5-1/2 HHGR5	4
39.	72060833	SCR 5/16-18X3/4 HH SLFTPG	2
40.	72062080	NUT 1/2-13 LOCK	2
41.	72062103	NUT 3/8-16 LOCK	8
42.	72062107	NUT 1/2-13 CTR LOCK	4
43.	72063002	WASHER5/16 WRT	2
44.	72053281	STREET ELBOW 1/8NPT	1
45.	72063027	MACH BUSHING 5/8X14GA NR	2
46.	72063039	MACH BUSHING 2X10GA NR	1
47.	72063049	WASHER 1/4 LOCK	2
48.	72063053	WASHER 1/2 LOCK	2
49.	72063116	WASHER 3/4 FLAT HARD	20
50.	72066095	RETAINING RING 2 EXT STD	1
51.	72066178	COTTER PIN 1/8X1	8
52.	72060207	CAP SCR 3/4-10X3 HHGR8	20
53.	73540004	HYD MOTOR (FROM 5-15-98)	1
	73051004	HYD MOTOR (TO 5-15-98)	1
	73054538	C'BALANCE VALVE (TO 5-15-98)	2
	72060738	CAP SCR (TO 5-15-98)	4
	7Q072112	O-RING (TO 5-15-98)	2
	5V151830	MOTOR BLOCK (TO 5-15-98)	1
55.	72066125	RETAINING RING 1 EXT HD	4
56.	72066185	COTTER PIN .16X1	2
58.	72060046	CAP SCR 3/8-16X1 HHGR5	4
59.	72063003	WASHER 3/8 WRT	10
60.	60108883	CHAIN	2
61.	70058060	COLD SHUT LINK	2
64.	72531826	REDUCER BUSHING 1/4-1/8NPT	1
65.	72060023	CAP SCR 5/16-18X3/4 HHGR5	2
66.	72063050	WASHER 5/16 LOCK	2
67.	60119748	GUARD-CTRL HANDLE	2
68.	72060006	CAP SCR 1/4-20X1-1/2 HHGR5	8
69.	72063001	WASHER 1/4 WRT	16
70.	72062104	NUT 1/4-20 LOCK	8

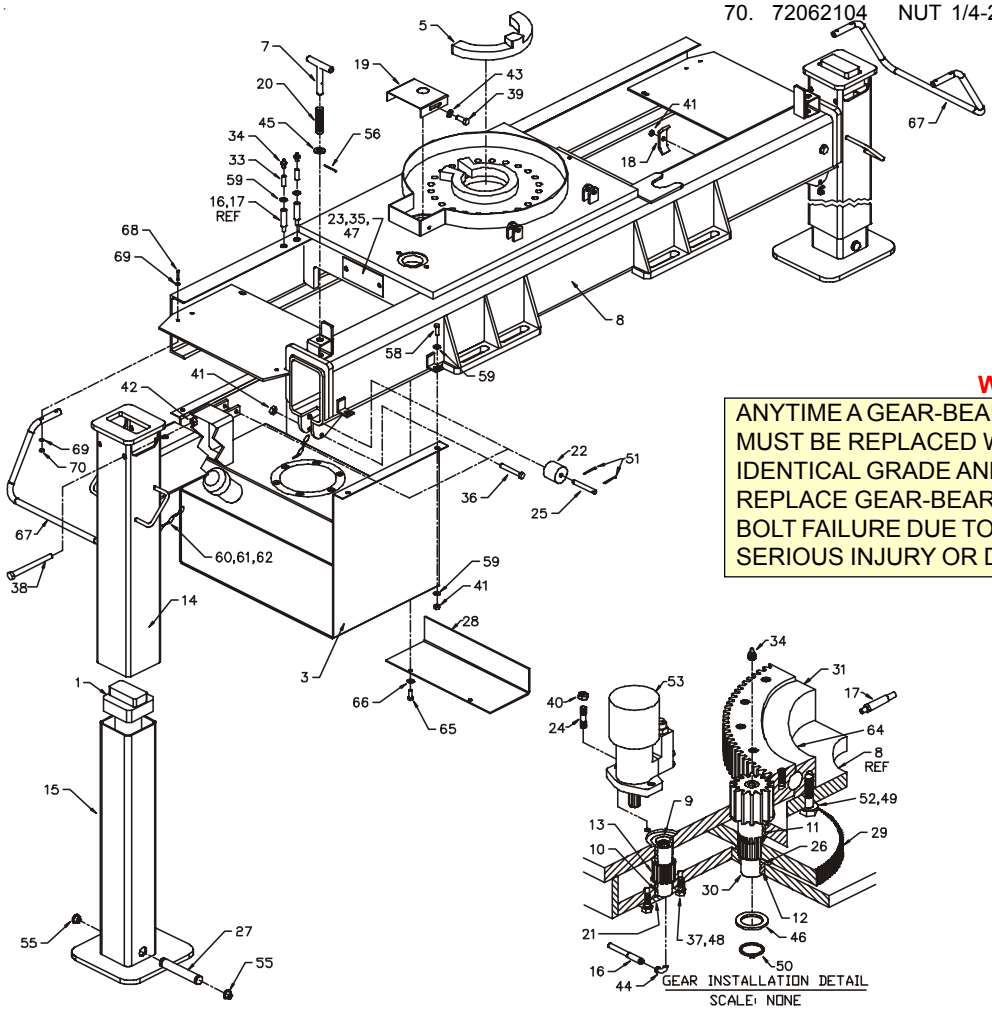

WARNING

ANYTIME A GEAR-BEARING BOLT IS REMOVED, IT MUST BE REPLACED WITH A NEW BOLT OF THE IDENTICAL GRADE AND SIZE. FAILURE TO REPLACE GEAR-BEARING BOLTS MAY RESULT IN BOLT FAILURE DUE TO METAL FATIGUE, CAUSING SERIOUS INJURY OR DEATH.

NOTE:
APPLY MOBILTAC 375NC LUBRICANT (OR EQUIVALENT) TO THE EXTERNAL TEETH OF THE TURNTABLE BEARING AND PINION GEAR.

PWR DN OUTRIGGER CYLINDER (3B221850)

ITEM	PART NO	DESCRIPTION	QTY
1.	4B221850	CASE (INCL:6)	1
2.	2G221850	ROD	1
3.	6I025087	PISTON	1
4.	6H025015	HEAD	1
5.	73054004	LOCKING/ HOLDING VALVE	1
6.	7PNPXT02	PLUG 1/8NPT (PART OF 1)	3REF
7.	6C150015	STOP TUBE	1
8.	72060708	CAP SCR 1/4-20 X 1 1/4 SH	6
9.	9B101214	SEAL KIT (INCL:10-18)	1
10.	7Q072137	O-RING (PART OF 9)	1REF
11.	7T66P025	SEAL, PISTON (PART OF 9)	1REF
12.	7T61N087	LOCK RING SEAL (PART OF 9)	1REF
13.	7T2N8015	WEAR RING (PART OF 9)	1REF
14.	6A025015	WAFER LOCK (PART OF 9)	1REF
15.	7Q072228	O-RING (PART OF 9)	1REF
16.	7Q10P228	BACK-UP RING (PART OF 9)	1REF
17.	7R546015	ROD SEAL (PART OF 9)	1REF
18.	7R14P015	ROD WIPER (PART OF 9)	1REF

NOTE

IT IS RECOMMENDED THAT ALL COMPONENTS OF THE SEAL KIT BE REPLACED WHENEVER THE CYLINDER IS DISASSEMBLED. THIS WILL REDUCE FUTURE DOWNTIME.

APPLY “LUBRIPLATE #630-2” MEDIUM HEAVY,MULTI-PURPOSE LUBRICANT OR EQUIVALENT TO ALL PISTON AND HEAD GLANDS, LOCK RING AND ROD THREADS BEFORE ASSEMBLY.

USE “NEVER-SEEZ” OR EQUIVALENT BETWEEN THE HEAD AND THE CASE WHEN ASSEMBLING THE CYLINDER.

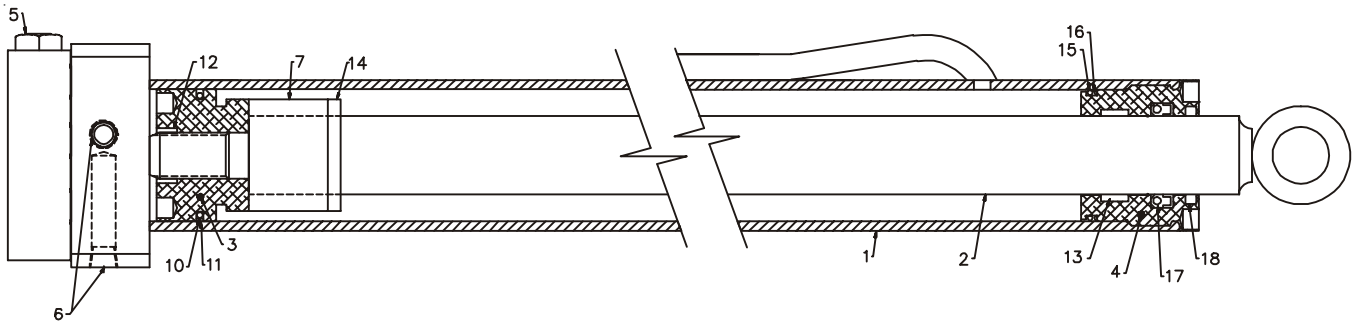

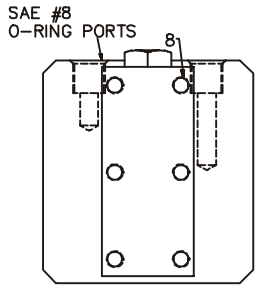

PWR OUT OUTRIGGER KIT (31712253)

ITEM	PARTNO.	DESCRIPTION	QTY
1.	3B220850	CYLINDER	2
2.	51703590	HOSE ASM 1/4X23 FF	2
3.	51704280	HOSE ASM 1/4X40 FF	4
4.	70029451	CONTROL HANDLE	2
6.	72053758	ELBOW 7/16MSTR 7/16MJIC 90°	4
7.	71039096	KNOB	2
8.	72060928	CAP SCR 1/2-13X2-1/4 HHGR5	4
9.	72062080	NUT 1/2-13 LOCK	4
10.	72532707	ADAPTER #4MJIC #6FJIC	2
11.	72532768	TEE 7/16MJIC .20 TUBE	2
12.	72066168	COTTER PIN .09X3/4	2
13.	72066338	CLEVIS PIN 5/16X1	2
15.	52704745	CONTROL ROD-M	2
16.	72066336	COTTER PIN-SPCL SHORT	1
17.	72066337	PIN-SPCL VB	1
18.	52704744	CONTROL ROD-F	1
21.	71392277	DECAL-POWER OUT	2
22.	70392864	DECAL-DGR STAND CLEAR	2
23.	70392867	DECAL-DANGER OR. MOVING	2

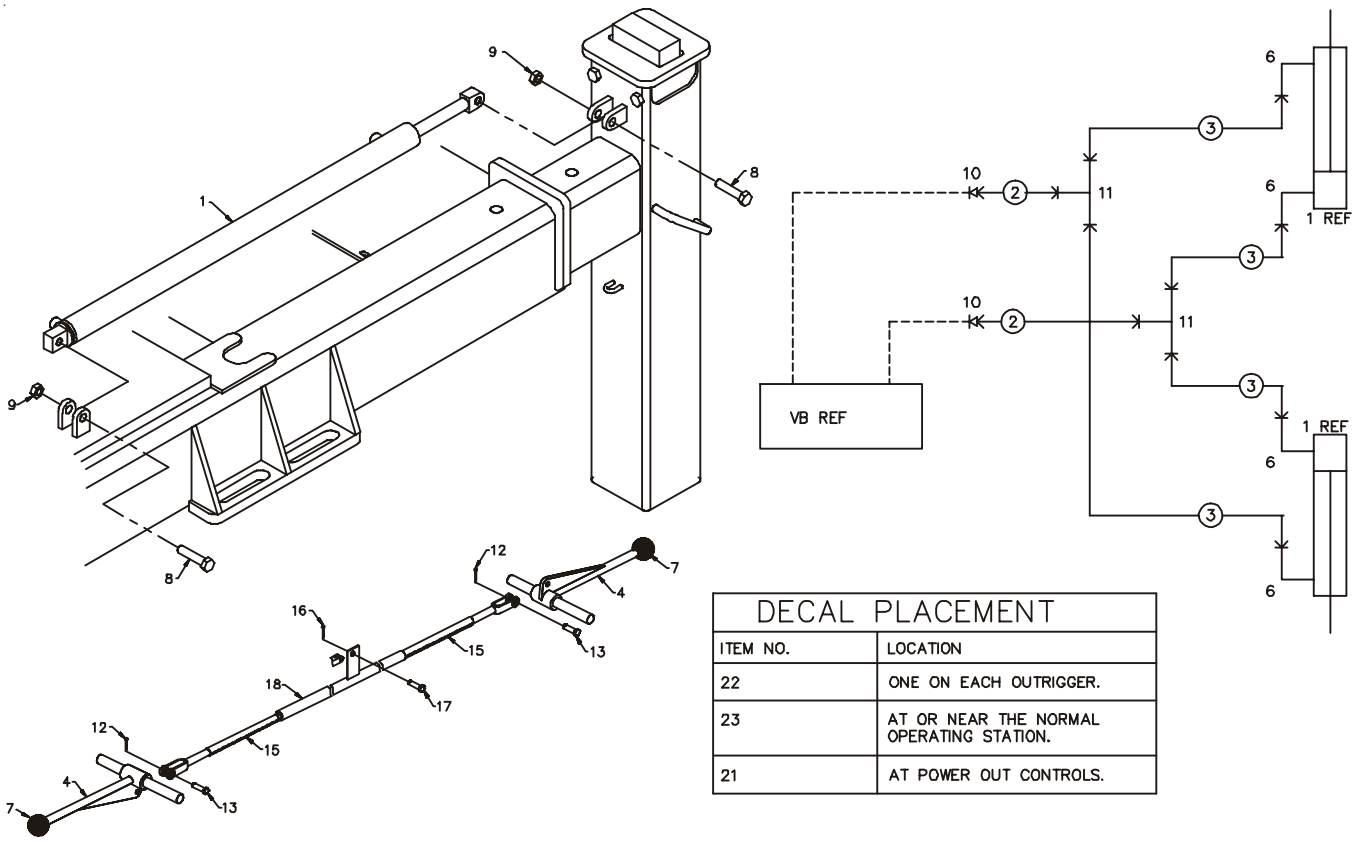

DECAL PLACEMENT	
ITEM NO.	LOCATION
22	ONE ON EACH OUTRIGGER.
23	AT OR NEAR THE NORMAL OPERATING STATION.
21	AT POWER OUT CONTROLS.

PWR OUT OUTRIGGER CYLINDER (3B220850)

ITEM	PART NO.	DESCRIPTION	QTY
1.	4B220850	CASE ASM	1
2.	4G115830	ROD	1
3.	6C125007	STOP TUBE	1
4.	6H012007	HEAD	1
5.	6I012050	PISTON	1
6.	9B050608	SEAL KIT (INCL:7-12))	1
7.	7Q072021	O-RING (PART OF 6)	1REF
8.	7Q072214	O-RING (PART OF 6)	1REF
9.	7Q10P214	BACK-UP RING (PART OF 6)	1REF
10.	7R100750	SEAL (PART OF 6)	1REF
11.	7R13P007	ROD WIPER (PART OF 6)	1REF
12.	7T66P012	PISTON SEAL (PART OF 6)	1REF
13.	72066029	RING, RETAINING	1

NOTE

IT IS RECOMMENDED THAT ALL COMPONENTS OF THE SEAL KIT BE REPLACED WHENEVER THE CYLINDER IS DISASSEMBLED. THIS WILL REDUCE FUTURE DOWNTIME.

APPLY “LUBRIPLATE #630-2” MEDIUM HEAVY,MULTI-PURPOSE LUBRICANT OR EQUIVALENT TO ALL PISTON AND HEAD GLANDS, LOCK RING AND ROD THREADS BEFORE ASSEMBLY.

USE “NEVER-SEEZ” OR EQUIVALENT BETWEEN THE HEAD AND THE CASE WHEN ASSEMBLING THE CYLINDER.

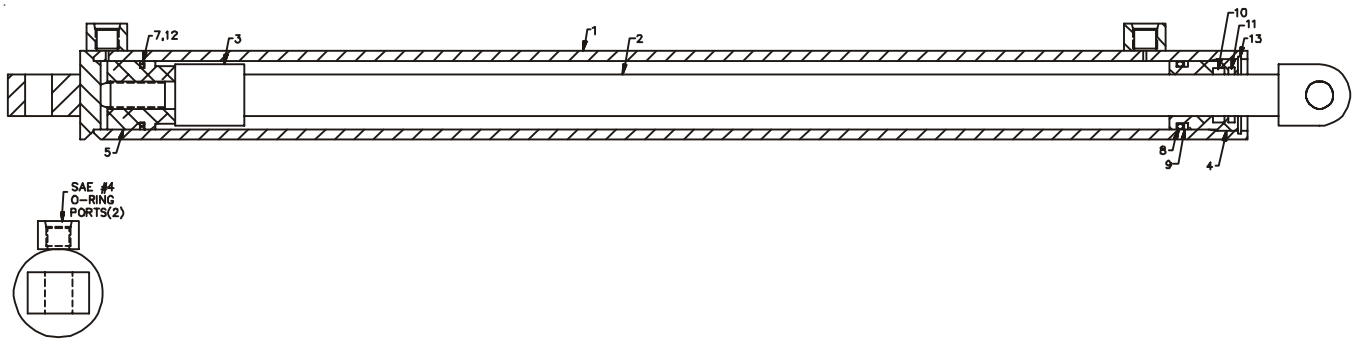

MAST ASM (41710870)

ITEM	PART NO.	DESCRIPTION	QTY
1.	52710871	MAST (INCL:2)	1
2.	7BF81520	BUSHING (PART OF 1)	2 REF
3.	60010118	HOSE CLAMP	2
4.	60104539	PINION COVER	1
5.	70029119	SERIAL NO. PLACARD	1
6.	72060931	CAP SCR 5/8-11X2-3/4 HHGR8	18
7.	72062103	NUT 3/8-16 LOCK	2
8.	72063119	WASHER 5/8 FLAT HARD	18
9.	72066340	POP RIVET 1/8	2

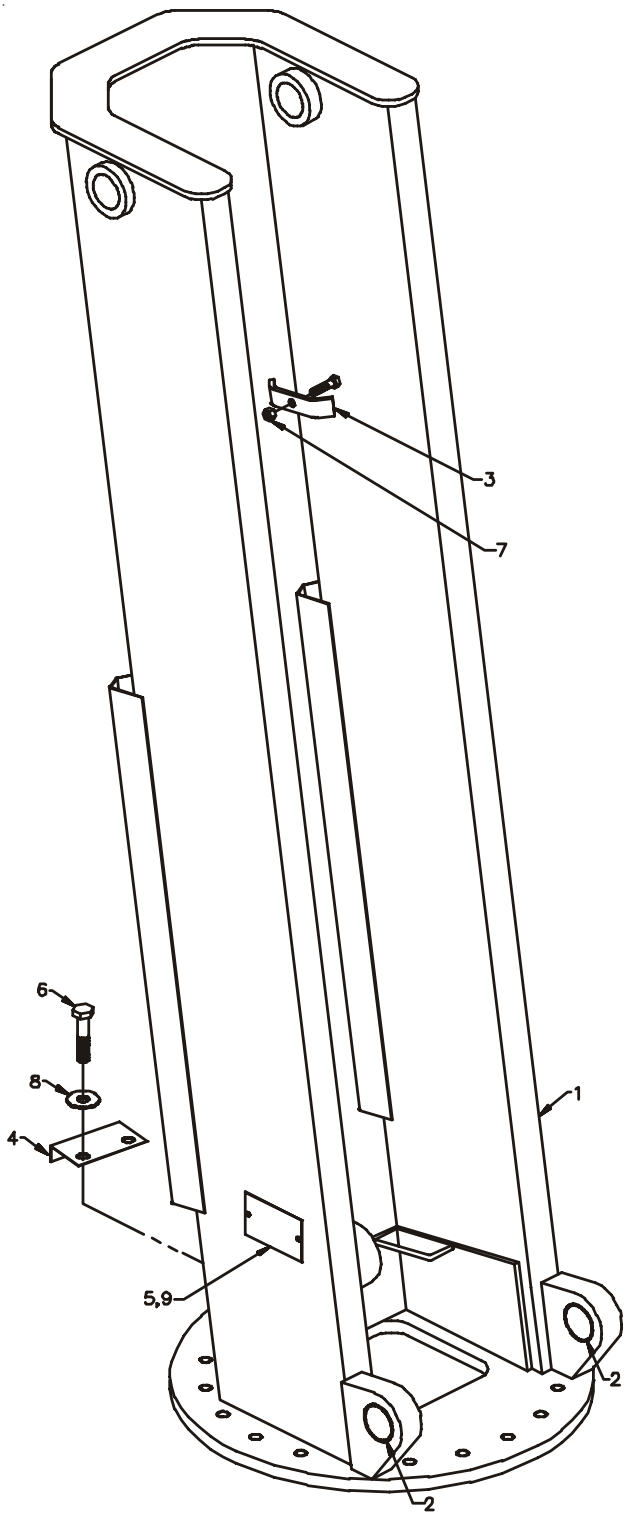

INNER BOOM (41718078)

1.	51718057 (WAS 3B270000)	INNER BOOM CYLINDER	2
2.	52704342	PIN	1
3.	52710909	INNER BOOM (INCL:4)	1
4.	7BF81220	BUSHING (PART OF 3)	12REF
5.	60106331	PIN RETAINER PLATE 3-1/2"	4
6.	60107303	PIN	1
7.	60107305	PIN	2
8.	60010118	HOSE CLAMP	1
9.	72053508	ZERK 1/8 NPT	1
10.	72060049	CAP SCR 3/8-16X1-3/4 HHGR5	1
11.	72060147	CAP SCR 5/8X11X1 HHGR5	7
12.	72062103	NUT 3/8-16 LOCK	1
13.	60109337	PIN RETAINER PLATE 3"	3

NOTE

ANYTIME THE PIN RETAINER PLATE BOLTS (ITEM 11) HAVE BEEN REMOVED, APPLY LOCTITE 262 TO THE THREADS BEFORE REASSEMBLY.

NOTE

CRANES WITH SERIAL NUMBERS BELOW 5271031001 USE INNER BOOM ASM 41710920 AND INNER BOOM CYLINDER NO. 3B270000. CRANES WITH SERIAL NUMBER 5271031001 AND ABOVE USE INNER BOOM ASM 41718078 AND INNER BOOM CYLINDER NO. 51718057.

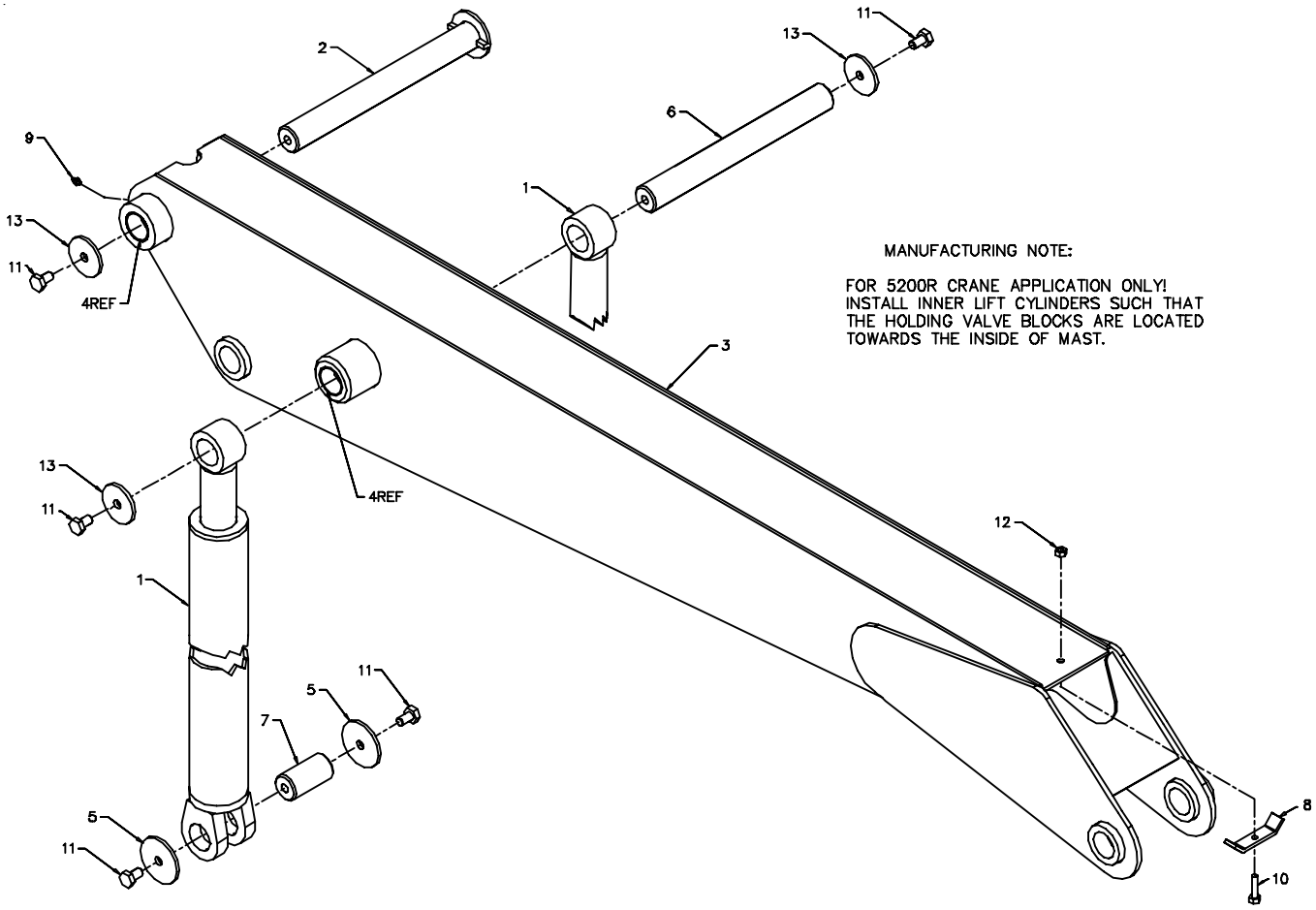

INNER BOOM CYLINDER (51718058)

1.	4B142920	CASE ASM (INCL:20 & 21)	1
2.	52718720	ROD ASM (INCL:19 & 20)	1
	(WAS 4H142920 ON 3B270000; 52718057)		
3.	6I035125	PISTON	1
4.	6H035025	HEAD	1
5.	9C142020	SEAL KIT (INCL:6-15)	1
6.	7Q072338	O-RING (PART OF 5)	1REF
7.	7Q10P338	BACK-UP RING (PART OF 5)	1REF
8.	7T2N8027	WEAR RING (PART OF 5)	1REF
9.	7R546025	ROD SEAL (PART OF 5)	1REF
10.	7R14P025	ROD WIPER (PART OF 5)	1REF
11.	7Q072151	O-RING (PART OF 5)	1REF
12.	7T66P035	PISTON SEAL (PART OF 5)	1REF
13.	7T65I035	PISTON RING (PART OF 5)	2REF
14.	7T61N125	LOCK RING (PART OF 5)	1REF
15.	6A025025	WAFER LOCK (PART OF 5)	1REF
16.	73054887	VALVE 25GPM	1
17.	6C150025	STOP TUBE	1
18.	6C300025	STOP TUBE	1
19.	72053507	ZERK 1/4-28 (PART OF 2)	1REF
20.	7BF81020	BUSHING (PART OF 1 & 2)	4REF
21.	7PNPXT02	PLUG 1/8NPT (PART OF 1)	3REF

NOTE

IT IS RECOMMENDED THAT ALL COMPONENTS OF THE SEAL KIT BE REPLACED WHENEVER THE CYLINDER IS DISASSEMBLED. THIS WILL REDUCE FUTURE DOWNTIME.

APPLY “LUBRIPLATE #630-2” MEDIUM HEAVY,MULTI-PURPOSE LUBRICANT OR EQUIVALENT TO ALL PISTON AND HEAD GLANDS, LOCK RING AND ROD THREADS BEFORE ASSEMBLY.

USE “NEVER-SEEZ” OR EQUIVALENT BETWEEN THE HEAD AND THE CASE WHEN ASSEMBLING THE CYLINDER.

NOTE

USED ON CRANES WITH SERIAL NUMBERS 5217031001 AND ABOVE. CRANES WITH SERIAL NUMBERS BELOW 5217031001 USED CYLINDER 3B270000.

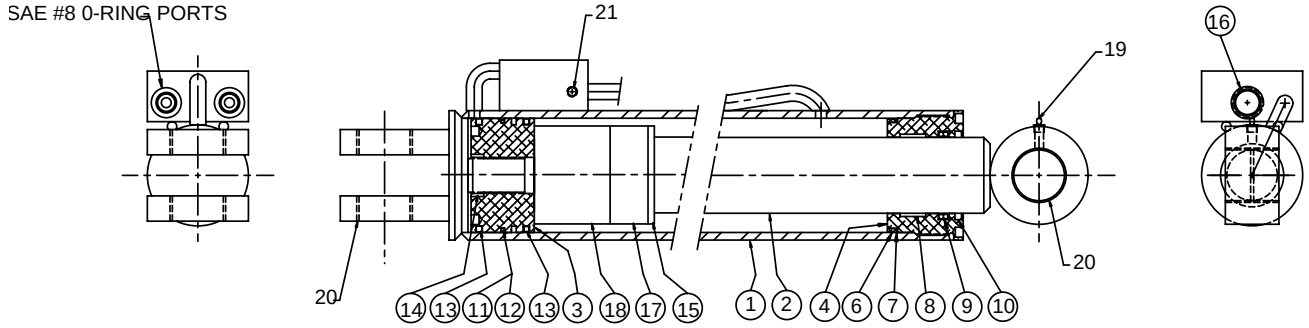

CYLINDER DATA			
EXT.	9.62 SQ.IN. 4.71 GAL	DRY WGT.	93 #
RETR.	1.49 SQ.IN. .73 GAL	BRG. SPAN:	12.93%
CASE	4.00OD X 3.50ID X 45.88L	TEST PSI:	3000
ROD	2.50 X 46.44 X 1.25S	OPER PSI:	2300

Notes:
1) Apply "Never-Seez" regular grade anti-seize and lubricating compound to threads on cylinder head only. Keep away from all seals.
2) Apply "Lubriplate" 630-2 Medium Heavy, Multipurpose Lubricant to all piston, head gland, and holding valve seals, nylon lock ring, cast iron piston rings, and rod stinger threads.

OUTER BOOM ASM (41712218)

ITEM	PART NO.	DESCRIPTION	QTY
1.	3C180920	OUTER CYLINDER (INCL:2)	1
2.	72053507	ZERK 1/4-28 (PART OF 1)	2 REF
3.	52704340	PIN	1
4.	52703767	PIN	1
5.	52708394	OUTER BOOM (INCL:6)	1
6.	7BF81220	BUSHING (PART OF 5)	4REF
7.	60109337	PIN RETAINER PLATE 3"	3
8.	72053508	ZERK 1/8 NPT	2
9.	72060147	CAP SCR 5/8-11X1 HHGR5	3
10.	52704341	PIN	1

NOTE

ANYTIME THE PIN RETAINER PLATE BOLTS (ITEM 9) HAVE BEEN REMOVED, APPLY LOCTITE 262 TO THE THREADS BEFORE REASSEMBLY.

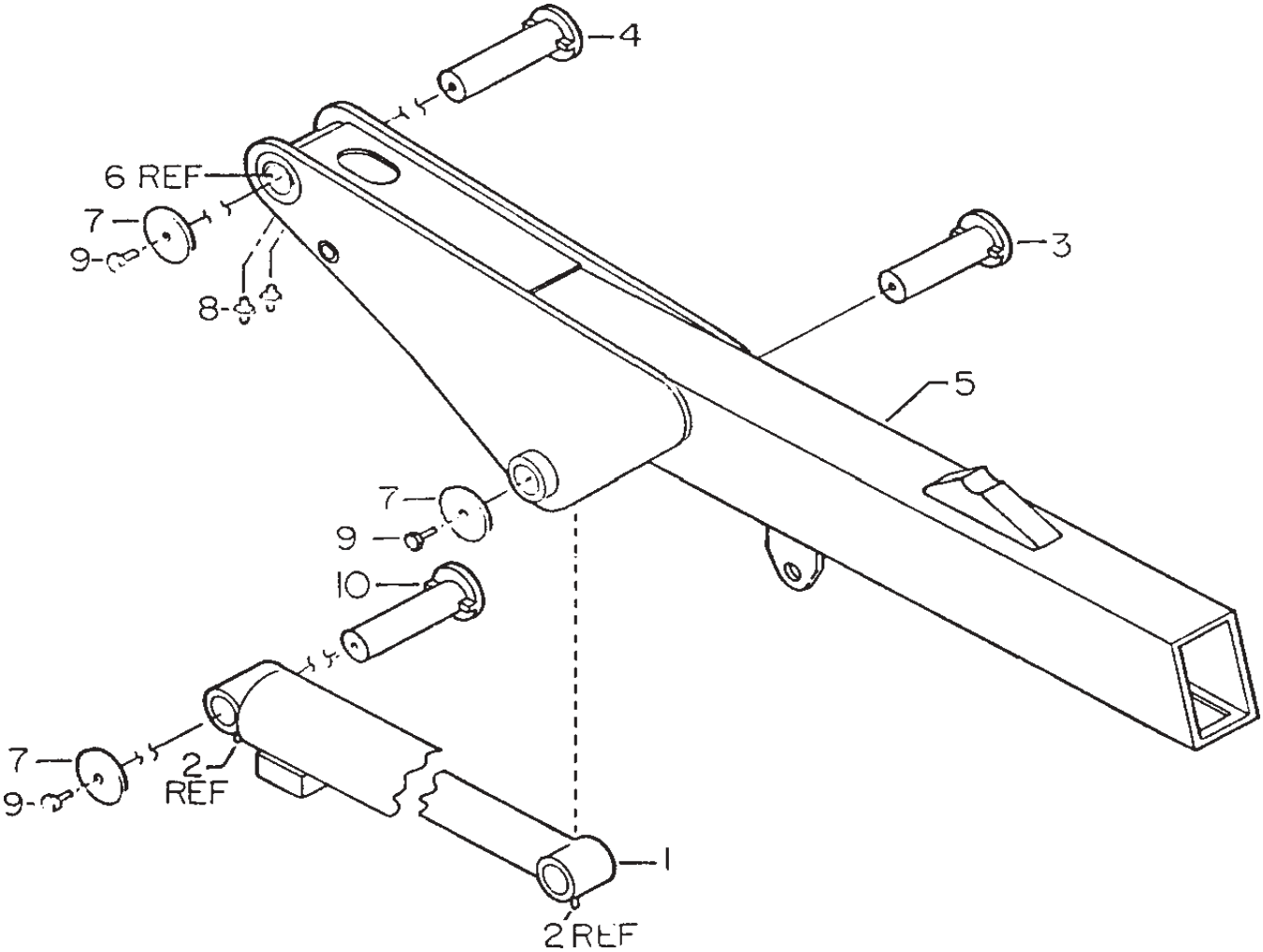

OUTER CYLINDER (3C180920)

ITEM	PART NO.	DESCRIPTION	QTY
1.	4C258870	CASE ASM (INCL:20-22)	1
2.	52718647	ROD (INCL:19,21) (WAS 4H180920)	1
3.	6I045143	PISTON	1
4.	6H045030	HEAD	1
5.	9C182423	SEAL KIT (INCL: 6-14,18	1
6.	7Q072345	O-RING (PART OF 5)	1REF
7.	7Q10P346	BACK-UP RING (PART OF 5)	1REF
8.	7T2N8032	ROD WEAR RING (PART OF 5)	1REF
9.	7R546030	ROD SEAL (PART OF 5)	1REF
10.	7R14P030	ROD WIPER (PART OF 5)	1REF
11.	7Q072155	O-RING (PART OF 5)	1REF
12.	7T66P045	PISTON SEAL (PART OF 5)	1REF
13.	7T65I045	PISTON RING (PART OF 5)	2REF
14.	7T61N143	LOCK RING SEAL (PART OF 5)	1REF
15.	73054242	COUNTERBALANCE VALVE	1
16.	6C150030	STOP TUBE	1
17.	6C300030	STOP TUBE	1
18.	6A025030	WAFER LOCK (PART OF 5)	1REF
19.	7BF81220	BUSHING (PART OF 2)	2 REF
20.	7BF81520	BUSHING (PART OF 1)	2REF
21.	72053507	ZERK 1/8NPT (PART OF 1&2)	2REF
22.	7PNPXT02	PLUG 1/8 NPT (PART OF 1)	3REF

NOTE

IT IS RECOMMENDED THAT ALL COMPONENTS OF THE SEAL KIT BE REPLACED WHENEVER THE CYLINDER IS DISASSEMBLED. THIS WILL REDUCE FUTURE DOWNTIME.

APPLY “LUBRIPLATE #630-2” MEDIUM HEAVY,MULTI-PURPOSE LUBRICANT OR EQUIVALENT TO ALL PISTON AND HEAD GLANDS, LOCK RING AND ROD THREADS BEFORE ASSEMBLY.

USE “NEVER-SEEZ” OR EQUIVALENT BETWEEN THE HEAD AND THE CASE WHEN ASSEMBLING THE CYLINDER.

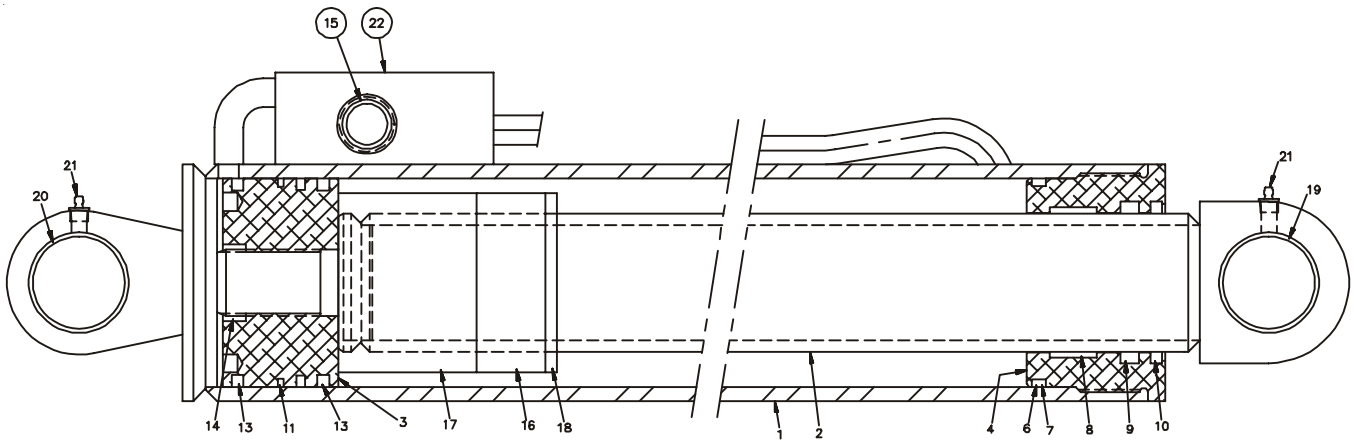

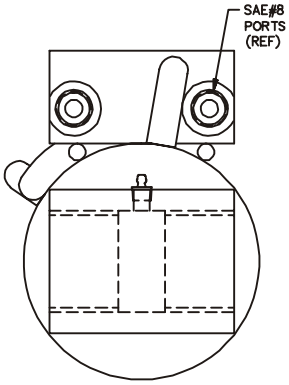

EXTENSION BOOM ASM (41708396)

ITEM	PART NO.	DESCRIPTION	QTY
1.	3B077880	CYLINDER	1
2.	51706199	HOOK ASM (INCL:3-9)	1
3.	52070151	PIN (PART OF 2)	1REF
4.	60108857	SPACER (PART OF 2)	1REF
5.	60107324	LINK (PART OF 2)	2REF
6.	71073035	SWIVEL HOOK (PART OF 2)	1REF
7.	72601666	CAP SCR 1 1/4-7X4 (PART OF 2)	1REF
8.	72062073	NUT 1 1/4-7 LOCK (PART OF 2)	1REF
9.	72066145	HAIR PIN .19 (PART OF 2)	1REF
10.	52708393	EXTENSION BOOM	1
11.	60010470	PIN	1
12.	60030064	WEAR PAD	1
13.	60030067	WEAR PAD	1
14.	60111956	PIN	1
15.	72060008	CAP SCR 1/4 X 2 HH GR5	1
16.	72062104	NUT 1/4-20 LOCK	1
17.	72063001	WASHER 1/4 LOCK	1
18.	72063034	MACH BUSHING 1X10GA	2
19.	72066125	RETAINING RING 1" HD	2

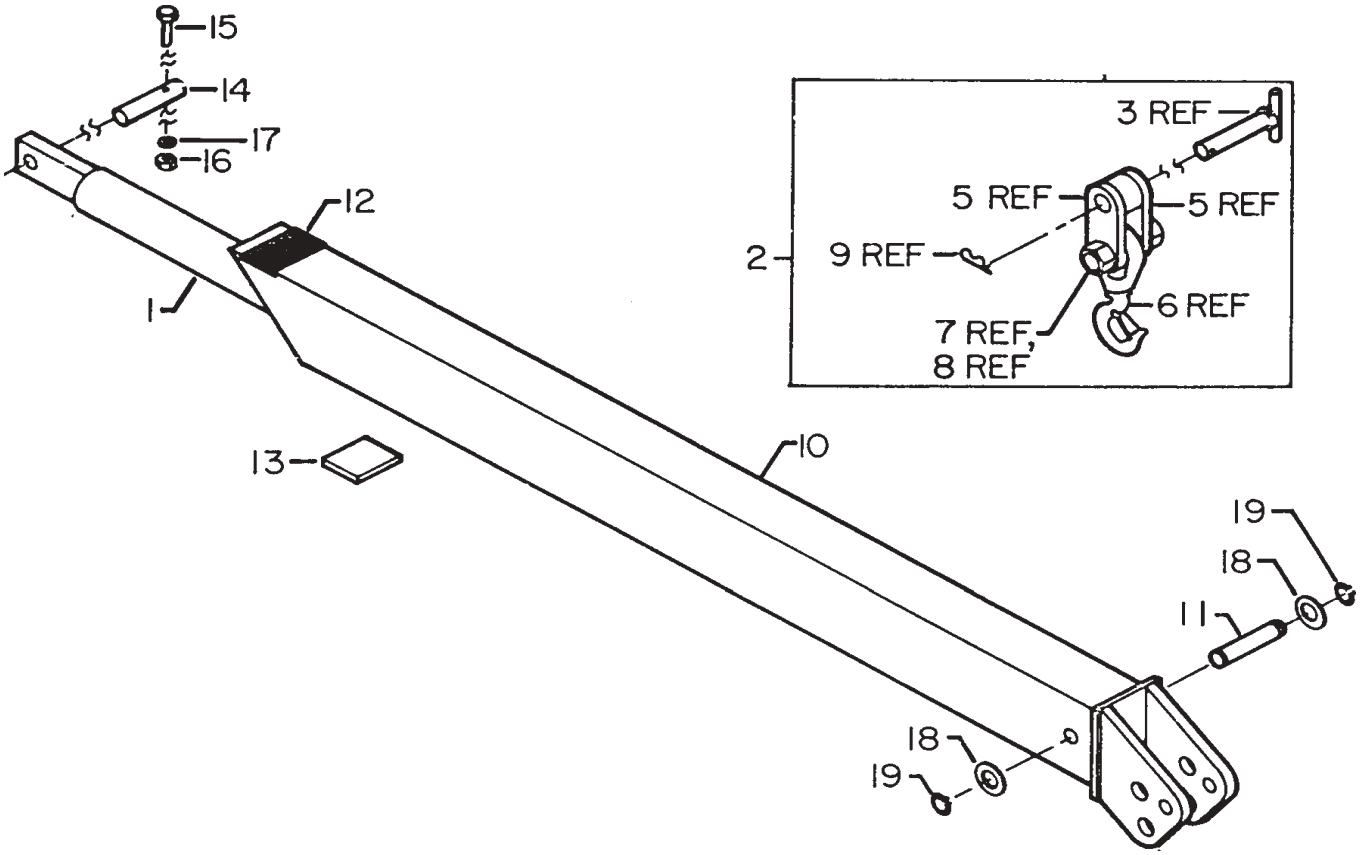

EXTENSION CYLINDER (3B077880)

ITEM	PART NO.	DESCRIPTION	QTY
1.	4B077880	CASE ASM (INCL:9)	1
2.	4G077880	ROD ASM	1
3.	6C300015	STOP TUBE	4
4.	6H025015	HEAD	1
5.	6I025087	PISTON	1
6.	73054304	VALVE	2
7.	9B101214	SEAL KIT (INCL:8, 10-17)	1
8.	6A025015	WAFER LOCK RING (PART OF 7)	1REF
9.	7PNPXT02	PIPE PLUG (PART OF 1)	4 REF
10.	7Q072137	O RING (PART OF 7)	1 REF
11.	7Q072228	O RING (PART OF 7)	1 REF
12.	7Q10P228	BACK UP RING (PART OF 7)	1 REF
13.	7R14P015	ROD WIPER (PART OF 7)	1 REF
14.	7R546015	ROD SEAL (PART OF 7)	1 REF
15.	7T61N087	LOCK RING (PART OF 7)	1 REF
16.	7T66P025	PISTON SEAL (PART OF 7)	1 REF
17.	7T2N8015	WEAR RING (PART OF 7)	1REF

NOTES

IT IS RECOMMENDED THAT ALL COMPONENTS OF THE SEAL KIT BE REPLACED WHENEVER THE CYLINDER IS DISASSEMBLED. THIS WILL REDUCE FUTURE DOWNTIME.

APPLY “LUBRIPLATE #630-2” MEDIUM HEAVY,MULTI-PURPOSE LUBRICANT OR EQUIVALENT TO ALL PISTON AND HEAD GLANDS, LOCK RING AND ROD THREADS BEFORE ASSEMBLY.

USE “NEVER-SEEZ” OR EQUIVALENT BETWEEN THE HEAD AND THE CASE WHEN ASSEMBLING THE CYLINDER.

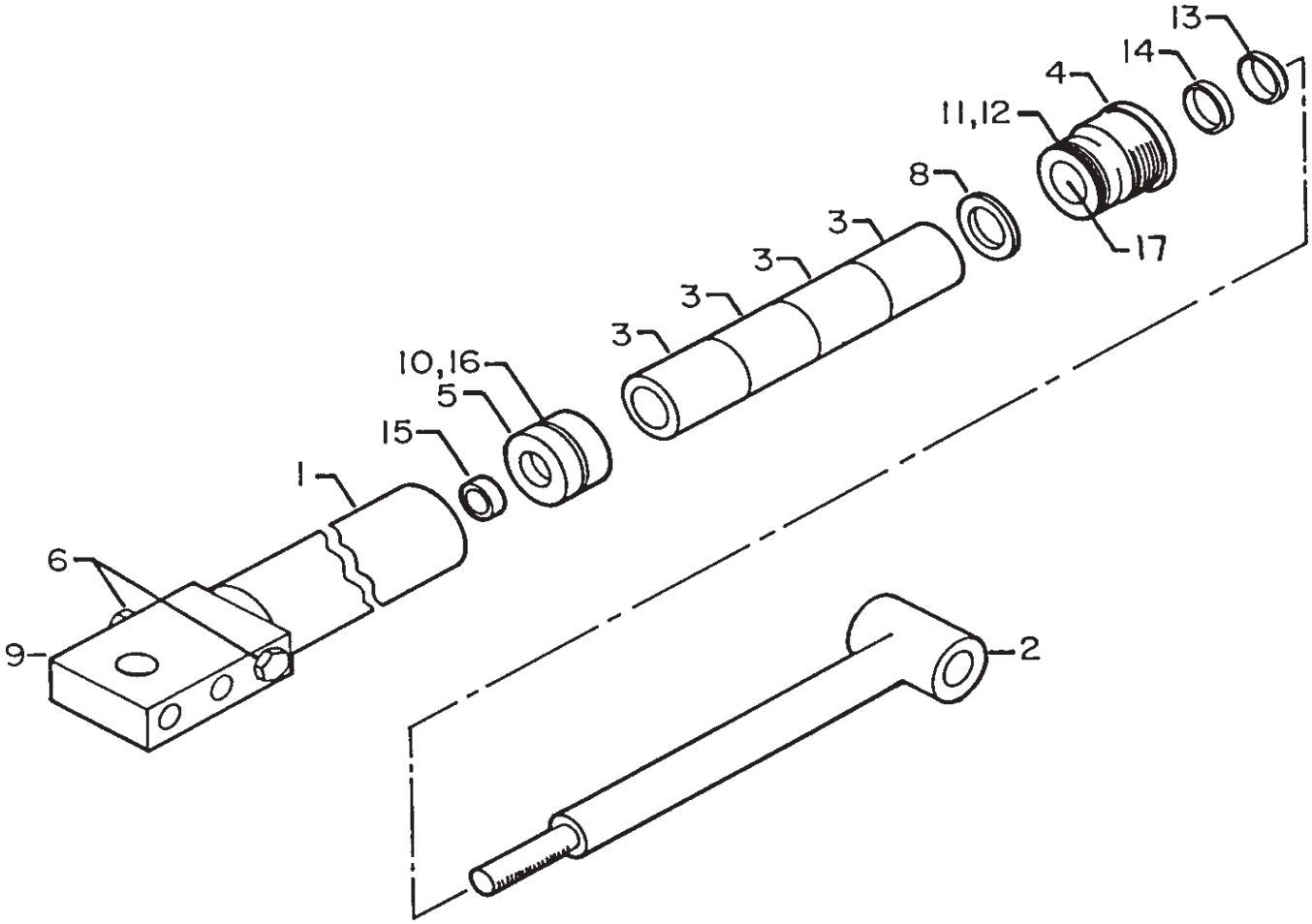

CONTROL KIT (90704417)

ITEM	PART	DESCRIPTION	QTY
1.	52704397	ROD-CTRL HANDLE MTG	2
2.	52704744	CONTROL ROD-F	6
3.	52704745	CONTROL ROD-M	12
4.	70029451	CONTROL HANDLE	12
5.	71039096	KNOB	12
6.	60030068	SPACER 1-3/8	2
7.	60030069	SPACER 1-3/4	6
9.	72066338	CLEVIS PIN 5/16X1	12
10.	72661169	CLEVIS PIN 5/16X3/4	6
11.	72066168	COTTER PIN 3/32X3/4	18
12.	72063119	WASHER 5/8 WRT	8

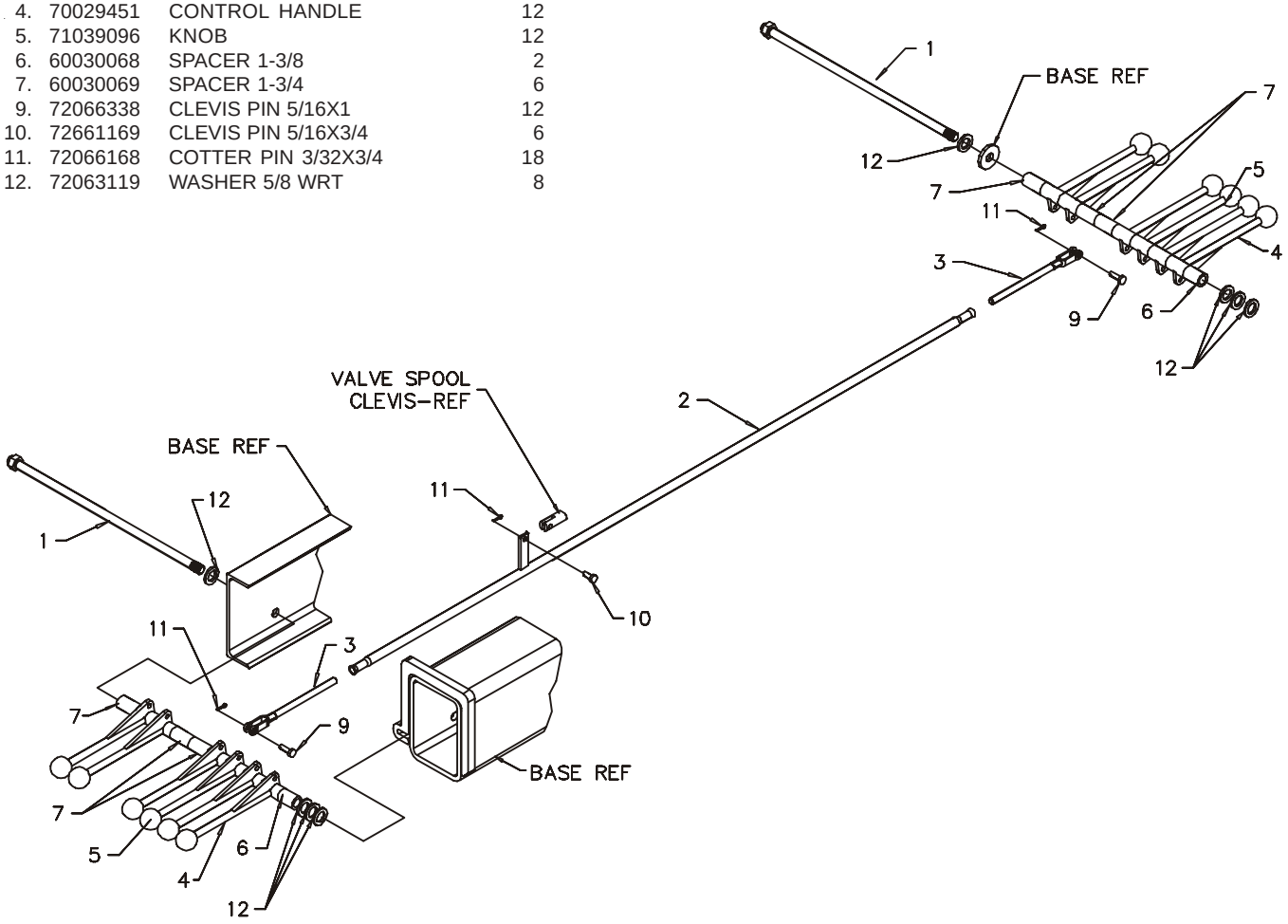

VALVEBANK ASM-8 SECT MNL (51710944)

ITEM	PART NO.	DESCRIPTION	QTY
1.	72532722	ADAPTER #10MSTR #6FSTR	16
2.	72532738	CAP 9/16JIC STL	4
3.	72053760	ELBOW #6MSTR #6MJIC 90°	7
4.	72053763	ELBOW #8MSTR #8MJIC 90°	1
5.	72053766	ELBOW #10MSTR #12MJIC 90°	1
6.	72532707	ADAPTER #4MJIC #6FJIC	2
7.	72532700	ELBOW 9/16MSTR 9/16MJIC XLG	8
8.	72532657	TEE 3/4JIC SWIVEL NUT	1
9.	72532675	CAP 3/4JIC STL	1
10.	70731499	VALVEBANK 8-SECTION	1
11.	72053762	ELBOW 9/16MSTR 3/4MJIC 90°	1

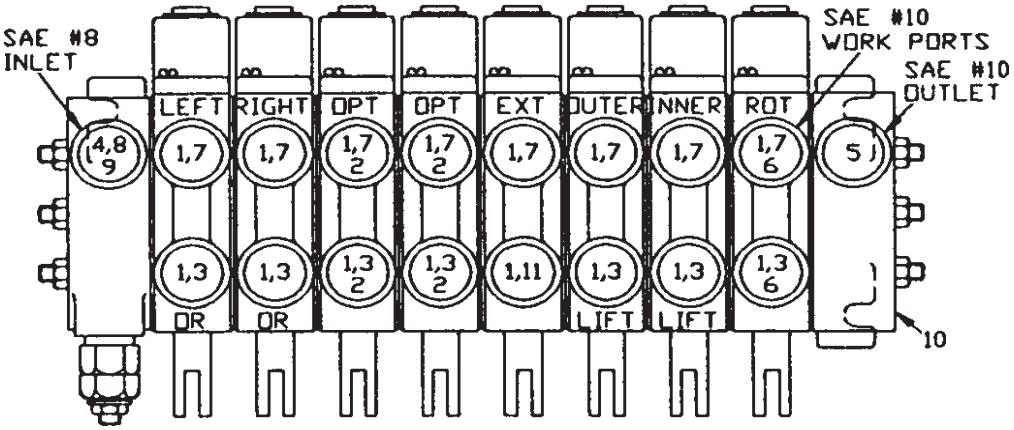

VALVE BANK (70731499)

ITEM	PART NO.	DESCRIPTION	QTY
1.	73054490	TANDEM VALVE SECTION	8
2.	73054488	END CAP LH	1
3.	94731681	TIE ROD KIT	1
4.	73731576	END CAP RH	1
5.	7Q072018	O-RING	18
6.	7Q072021	O-RING	9
7.	7Q072017	O-RING	9

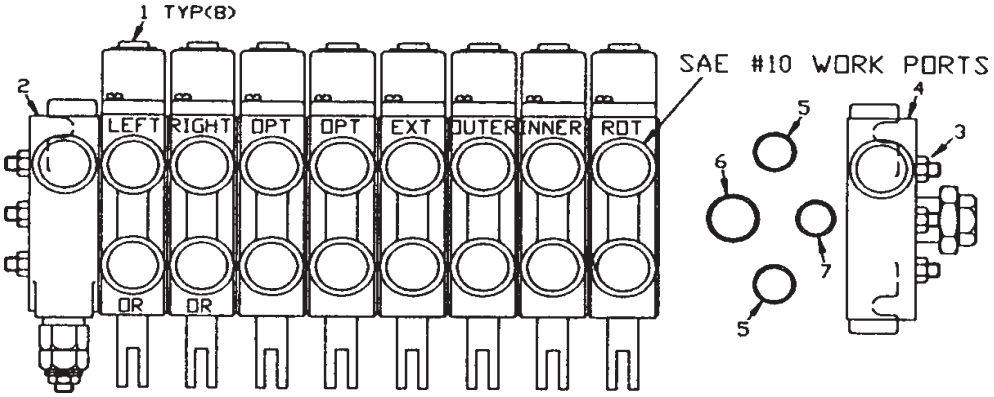

INSTALLATION KIT (93704355)

ITEM	PART NO.	DESCRIPTION	QTY
1.	70732573	RESERVOIR ASM 17.3GAL	1REF
2.	72060004	CAP SCR 1/4-20X1 HHGR5Z	2
3.	72060046	CAP SCR 3/8-16X1 HHGR5Z	4
4.	72062103	NUT 3/8-16 HEX NYLOC	4
5.	72062104	NUT 1/4-20 HEX NYLOC	2
6.	72063001	WASHER 1/4 W FLAT	4
7.	72063003	WASHER 3/8W FLAT	8
8.	72661642 (WAS 72066516)	HOSE CLAMP 1-3/4 T-BOLT	2
9.	72531427	ELBOW 3/4MPT #12MJIC 90°	4
10.	72532346	BARB NIPPLE 1-1/4 1-1/4 90°	1
11.	72532670	ELBOW #8MJIC #8FJIC 45°	1
12.	72532834	BEAD NIPPLE 1.00MPT 1-1/4 90°	1
13.	72532972	ADPTR #8MJIC #12FJIC	1
14.	73054129	GATE VALVE 3/4 BRASS	1
15.	72053141	PIPE NIPPLE 3/4XCLOSE BLK	1
16.	73052000	HYD FILTER 10MIC 3/4NPTF	1
17.	60121443	OIL FILTER BRACKET	1
18.	51393468	HOSE 3/4X60 #12F#12F	1
19.	51394360	HOSE 3/4X24 #12F#12F	1
20.	51394916	HOSE 1/2X99 #8F#8F	1
21.	60350060	HOSE 1-1/4 100R4 X 63	1
23.	60010354	CLAMP PLATE	4
24.	60107478	WASHER-SQ TIEDOWN	8
25.	60107829	STUD-TIE DOWN 1X18	8
26.	52706660	SUPPORT-TRACK FRAME 9-1/2	4
27.	72062141	NUT 1.00-8 HEX LOCK GR5	16
28.	72063066	WASHER 1.00 HI STR ZINC	8
30.	72060002	CAP SCR 1/4-20X3/4 HHGR5Z	2
31.	72063049	WASHER 1/4 LOCK	2

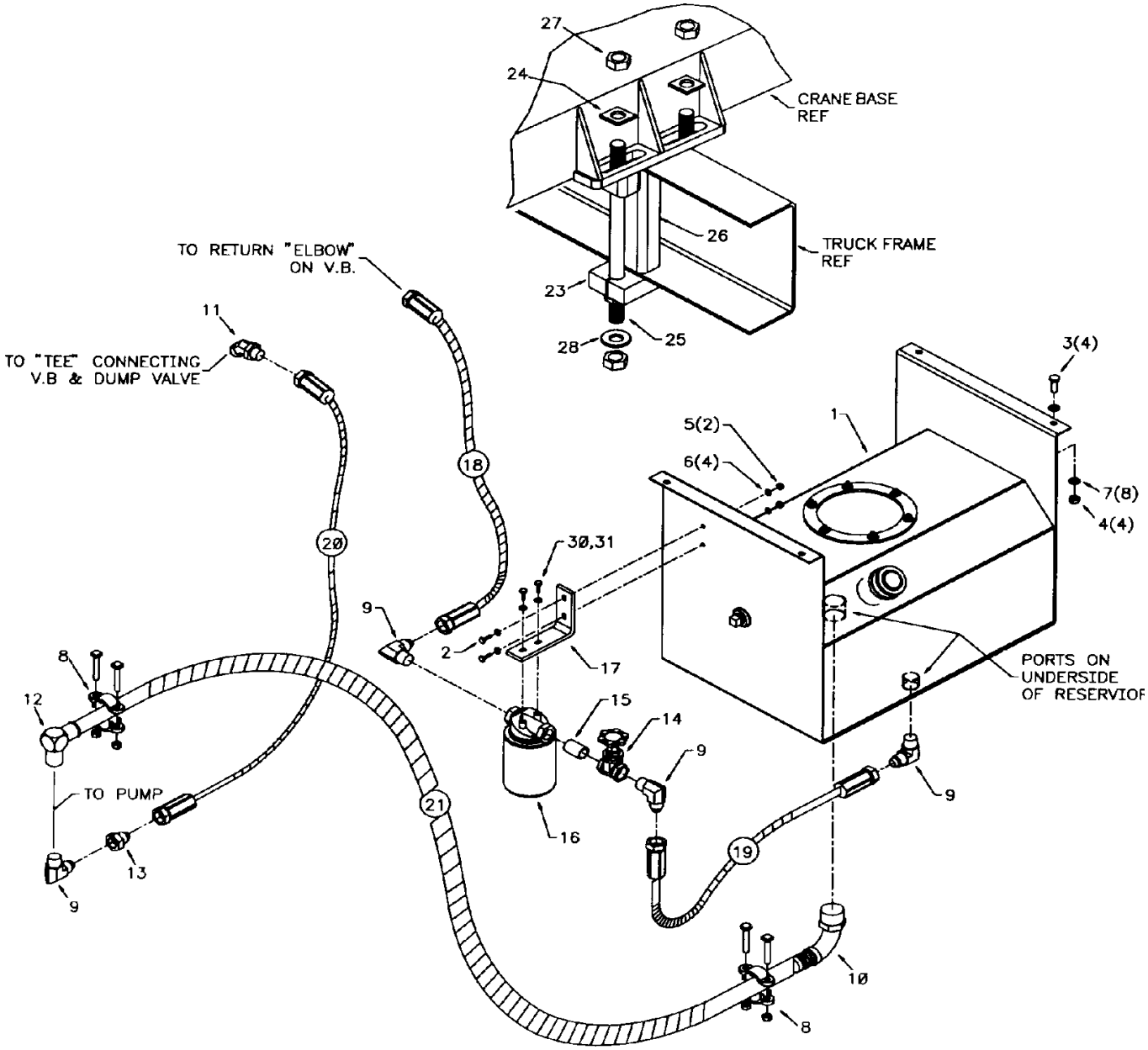

HYDRAULIC KIT (91708398)

ITEM	PART NO.	DESCRIPTION	QTY
1.	73734514	VALVE BANK- 6 SECT 18D RADIO (WAS 73734071)	1 REF
2.	51721343	HOSE KIT-5217 RADIO REMOTE	1
3.	51397467	HOSE-FF .38 X 30.00 (6-8) 100R17	2 REF
4.	51395306	HOSE-FF .38 X 27.00 (8-8) 100R17	2 REF
5.	51397447	HOSE-FF .38 X 121.00 (6-8) 100R17	2 REF
6.	51397446	HOSE-FF .38 X 114.00 (6-6) 100R17	2 REF
7.	51397475	HOSE-FF .38 X 226.00 (6-8) 100R17	2 REF
8.	51397470	HOSE-FF .38 X 65.00 (6-6) 100R17	2 REF
9.	51397463	HOSE-FF .38 X 51.00 (4-4) 100R17	2 REF
10.	72532358	ADPTR-M STR/M JIC 8 8	8
11.	72531205	TEE-MALE JIC .75-16 .50 TUBE	2
12.	72062103	NUT .38-16 HEX NYLOC ZINC	3
13.	72060048	CAP SCR .38-16X 1.50 HH GR5 Z	3
14.	72532353	ADPTR-M STR/M JIC 6 4	2
15.	72532722	ADPTR-M STR/F STR 10 6	2
16.	72532790	ADPTR-M JIC/F JIC 6 8	1
17.	72532700	ELBOW-M STR/90/M JIC XLG 6 6	4
18.	72532351	ADPTR-M STR/M JIC 4 4	1
19.	51395870	HOSE-FJ .25 X 15.00 (4-4) 100R17	1 REF
20.	51395200	HOSE-FF .38 X 12.00 (8-8) 100R17	2 REF
21.	51397468	HOSE-FF .38 X 41.00 (8-8) 100R17	1 REF
22.	51395705	HOSE-FF .38 X 20.00 (8-8) 100R17	1 REF
23.	72533663	ELBOW-M JIC/90/M JIC 8 8	1
24.	72532657	TEE-SWVL NUT RUN JIC 8	1
25.	72532665	ADPTR-M JIC/F JIC 4 8	1
26.	72053763	ELBOW-M STR/90/M JIC 8 8	2
27.	73540061	VALVE-CBAL	1
28.	72060008	CAP SCR .25-20X 2.00 HH GR5 Z	2
29.	72063049	WASHER .25 LOCK ZINC	2

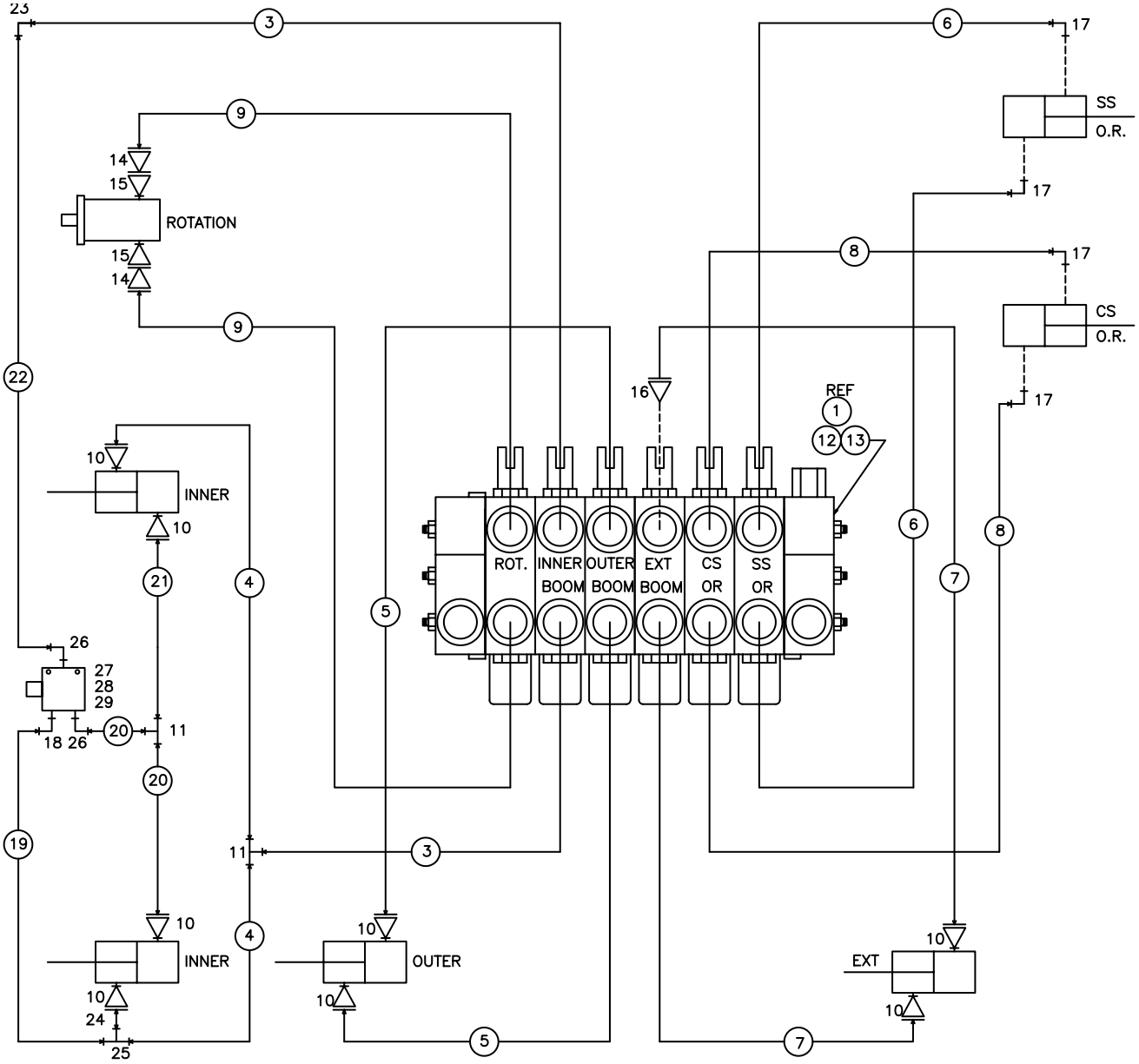

CAPACITY ALERT KIT-AUDIBLE (31705698)

ITEM	PART NO.	DESCRIPTION	QTY
1.	72060731	CAP SCR 5/16-18X3/4 SH	4
2.	60025221	MANIFOLD	1
3.	72532140	PLUG 9/16-18 STR THD HH	1
4.	7Q072015	O-RING	1
5.	77041283	PRESSURE SWITCH	1
6.	89044188	WIRE-14GA(Customer Supplied)	REF
7.	99900118	INSTALLATION DWG	1

NOTE

This capacity alert system consists of a pressure switch mounted on the lift side of the inner boom lift cylinder which senses hydraulic pressure. It is to be connected electrically (by the customer) to an audible warning device such as the truck chassis horn, using 14-gauge wire.

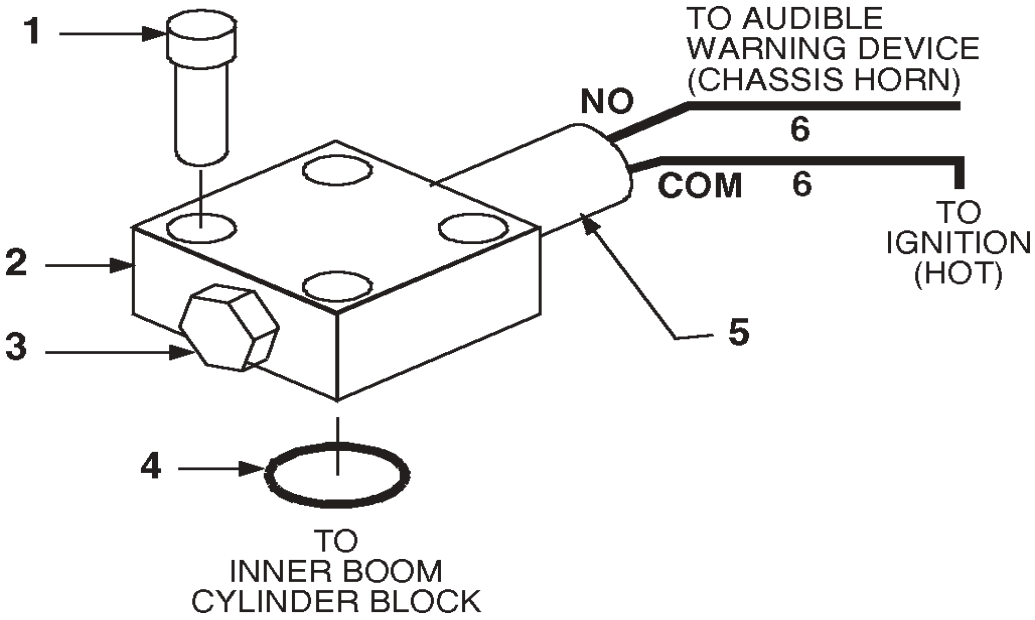

CAPACITY ALERT KIT - 2800 PSI (31717514)

1.	77041543	PRESSURE SWITCH	1
2.	7Q072015	O-RING 9/16 X 11/16 X 1/16	1
3.	72532140	PLUG-STR HEX HS STL 9/16	1
4.	60025221	MANIFOLD-CAP ALERT	1
5.	72060731	CAP SCR 5/16-18 X 3/4 SH Z	4

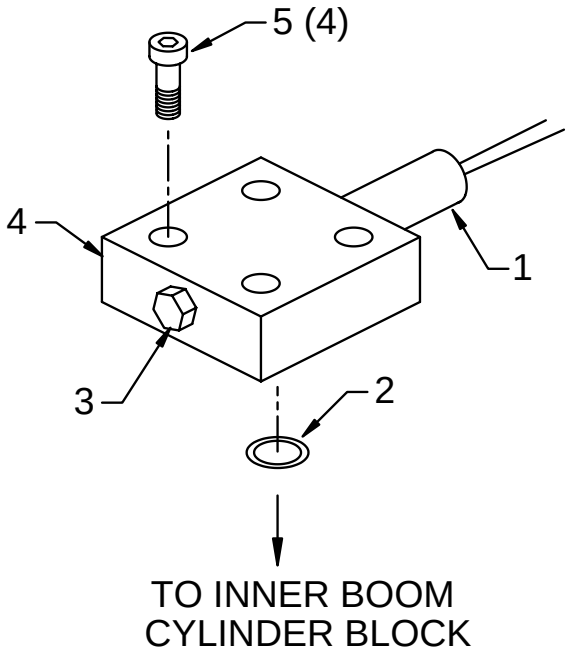

BEACON LIGHT KIT-LOW MOUNT (51710948)

ITEM	PART NO.	DESCRIPTION	QTY
1.	60103464	DASH BRACKET	1
2.	60116337	BRACKET-LOW MOUNT	1
3.	72060004	CAP SCR 1/4-20X1 HH GR5	5
4.	72060048	CAP SCR 3/8-16X1-1/2 HH GR5	2
5.	72062000	NUT 1/4-20 HEX	5
6.	72062002	NUT 3/8-16 HEX	2
7.	72063049	WASHER 1/4 LOCK	5
8.	77040000	TERMINAL RING #10 16-14GA	3
9.	77040013	BEACON LIGHT-AMBER	1
10.	77040048	BUTT CONNECTOR 16-14GA	1
11.	77040053	TERMINAL RING 1/4 12-10GA	1
12.	77041345	TOGGLE SGL THW 8530K39	1
13.	77042001	INDICATOR LIGHT-RED	1
14.	89044001	WIRE 14GA	18FT
15.	89044056	LOOM .31 ID	18FT
16.	72063051	WASHER 3/8 LOCK	2

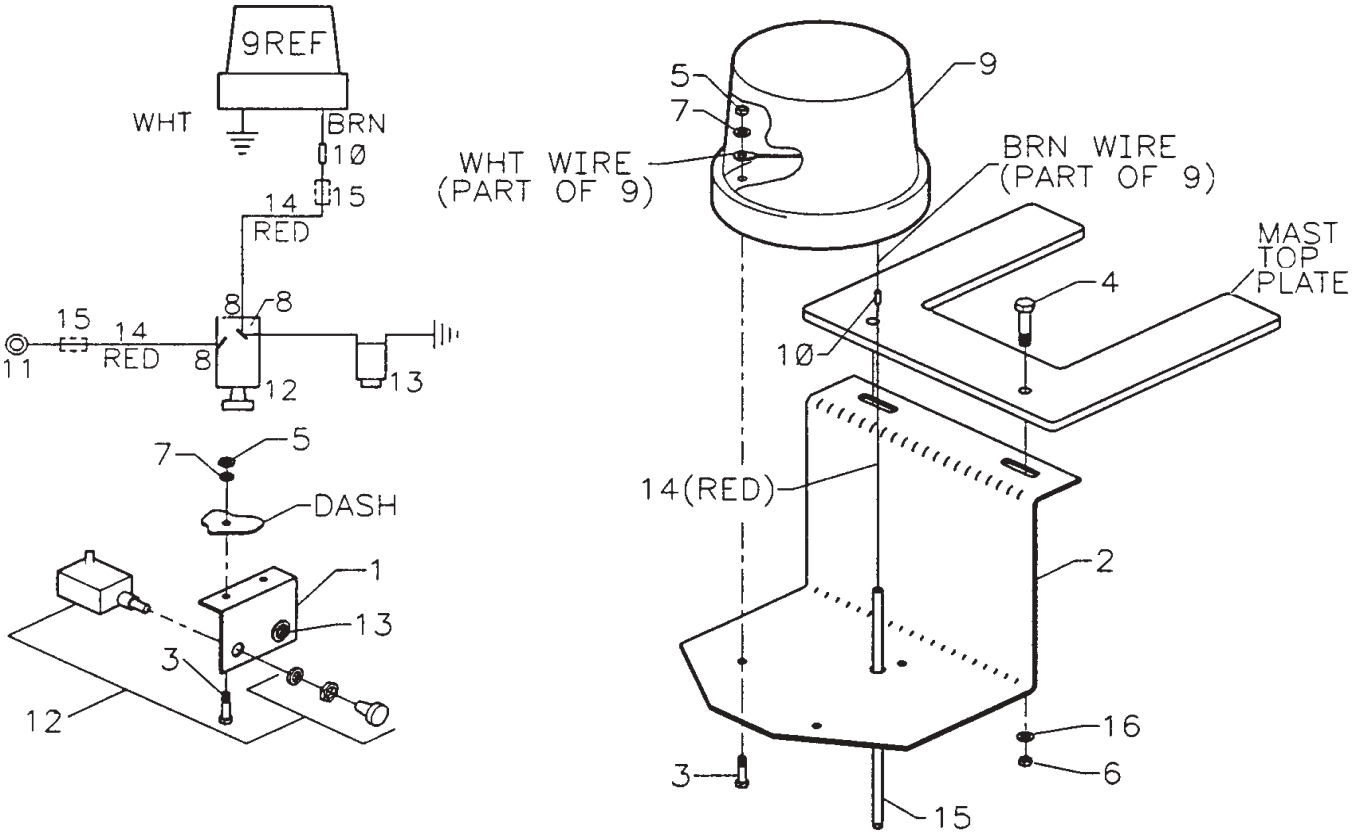

BEACON LIGHT KIT-HIGH MOUNT (51708392)

ITEM	PART NO.	DESCRIPTION	QTY
1.	60103464	DASH BRACKET	1
2.	60112305	BRACKET-HIGH MOUNT	1
3.	72060004	CAP SCR 1/4-20X1 HH GR5	5
4.	72060048	CAP SCR 3/8-16X1-1/2 HH GR5	2
5.	72062000	NUT 1/4-20 HEX	5
6.	72062002	NUT 3/8-16 HEX	2
7.	72063049	WASHER 1/4 LOCK	5
8.	77040000	TERMINAL RING #10 16-14GA	3
9.	77040013	BEACON LIGHT-AMBER	1
10.	77040048	BUTT CONNECTOR 16-14GA	1
11.	77040053	TERMINAL RING 1/4 12-10GA	1
12.	77041345	TOGGLE SGL THW 8530K39	1
13.	77042001	INDICATOR LIGHT-RED	1
14.	89044001	WIRE 14GA	18FT
15.	89044056	LOOM .31 ID	18FT
16.	72063051	WASHER 3/8 LOCK	2

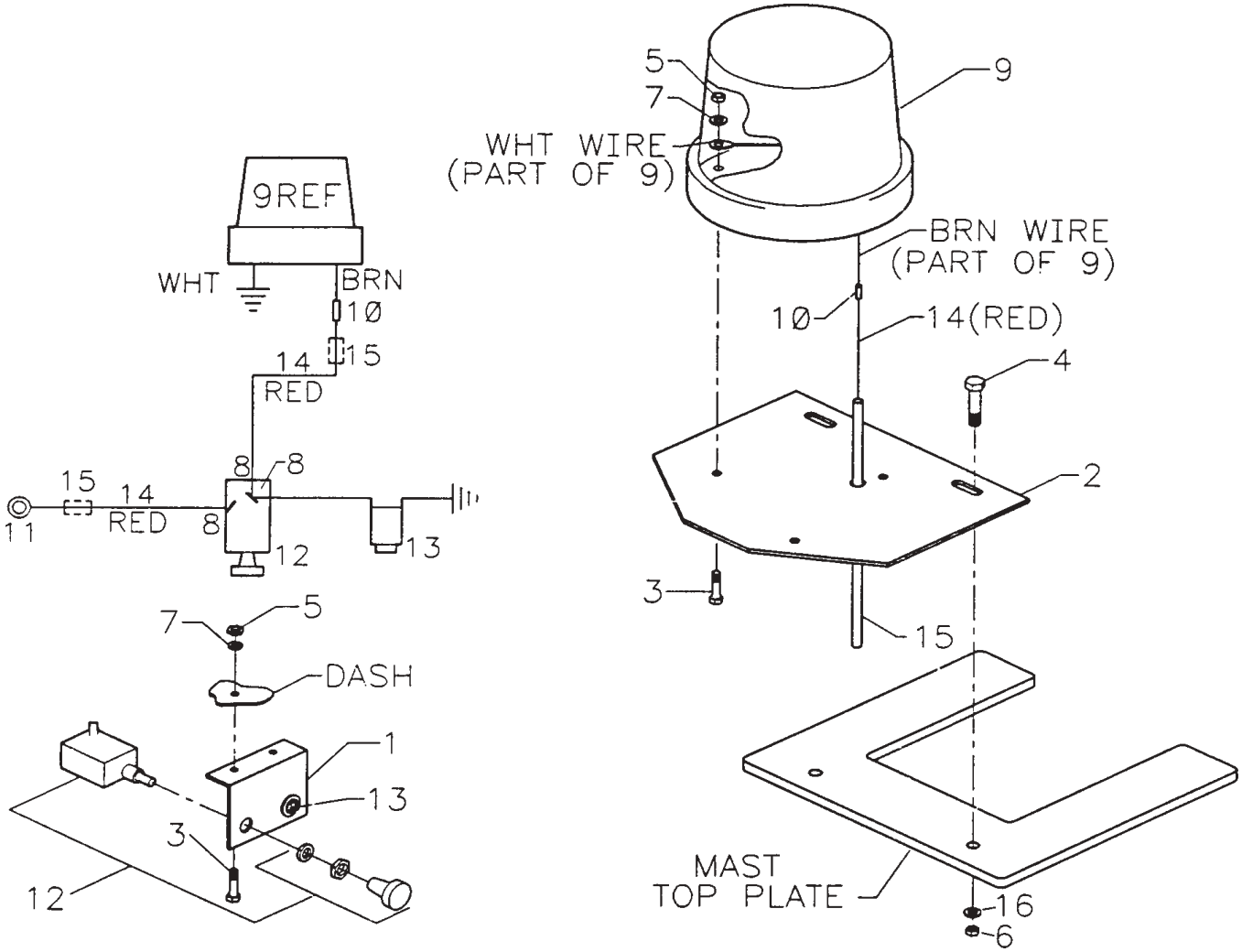

RESERVOIR ASM-15.5 GAL (70732573)

ITEM	PART NO.	DESCRIPTION	QTY
4.	(530047)	COVER	1
9.	(820117)	DIPSTICK ASM	1
10.	70144326	STRAINER 100MESH	1
11.	73052001	PLUG 3/4FPT SQHD MAGNETIC	1
13.	72062000	NUT 1/4-20 HEX	6
14.	72063001	WASHER 1/4 FLAT	6
15.	76393565	O-RING	1
18.	70034410	DIFFUSER 3/4NPT	1
19.	70732791	SCREEN 100MESH	1
20.	72053415	PLUG 3/4 SQHD STEEL	2

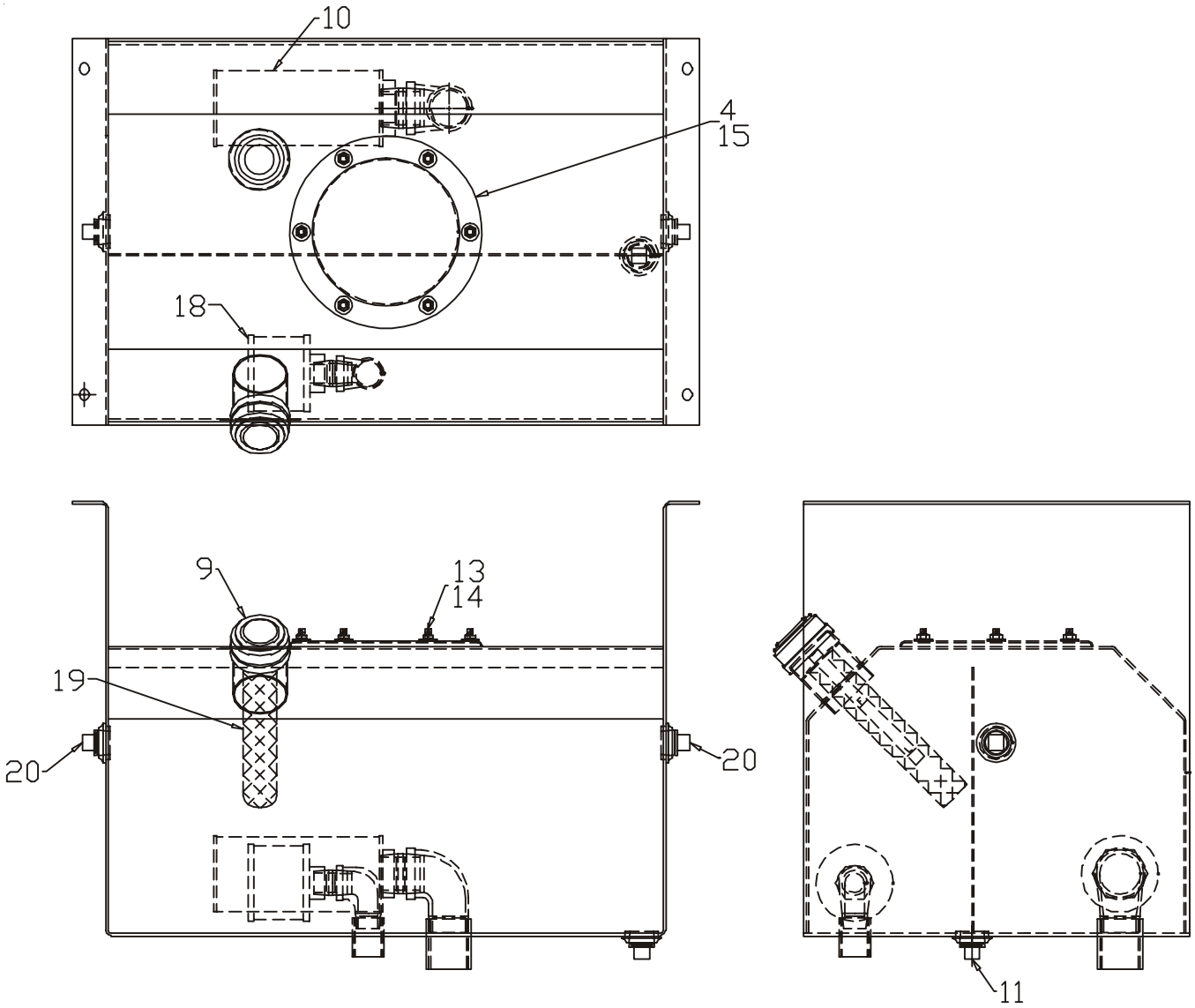

HYDRAULIC SHUTDOWN KIT (31713709)

ITEM	PART NO.	DESCRIPTION	QTY
1.	77041459	LIMIT SWITCH	2
2.	60120004	BRACKET	2
3.	52713708	MOUNT	4
4.	60120005	BRACKET	4
5.	72063049	WASHER .25 LOCK ZINC	12
6.	72060002	CAP SCR 1/4-20X3/4 HHGR5	8
7.	72060006	CAP SCR 1/4-20X1-1/2 HHGR5	8
8.	72060011	CAP SCR 1/4-20X2-3/4 HHGR5	2
9.	72060052	CAP SCR 3/8-16X2-1/2 HHGR5	4
10.	72063001	WASHER 1/4 WRT	28
11.	72062104	NUT 1/4-20 LOCK	10
12.	72062103	NUT 3/8-16 LOCK	4
13.	72063215	WASHER 3/8 BELLEVILLE SS	4
14.	77044468	STRAIN RELIEF 1/2	2
15.	72060004	CAP SCR .25-20 x 1.00 HH GR5 Z	4
17.	72053763	ELBOW #8MSTR #8MJIC 90°	2
20.	89044232	WIRE 14GA RED	5FT
21.	89044331	LOOM	7FT
22.	77040186	TERMINAL 1/4 FSLPON 16-14GA	4
23.	89044274	WIRE 14GA BLK	4"
24.	77040000	TERMINAL #10 RING 16-14GA	1
25.	73054980	DUMP VALVE	1
26.	60119748	GUARD (PART OF BASE ASM)	2REF
27.	51397477	HOSE-FZ 1/2X16 8-8 100R17 (WAS 51394918)	1
28.	51395891	HOSE-FF 1/2X27 8-8 100R17 (WAS 51704311)	1
29.	60120093	SPACER	1
30.	60120153	BRACKET	2
31.	72063003	WASHER 3/8 WRT	8
32.	89044188	CABLE 14AWG DUPLEX	15FT
33.	72053764	ELBOW #10MSTR #8MJIC 90°	1

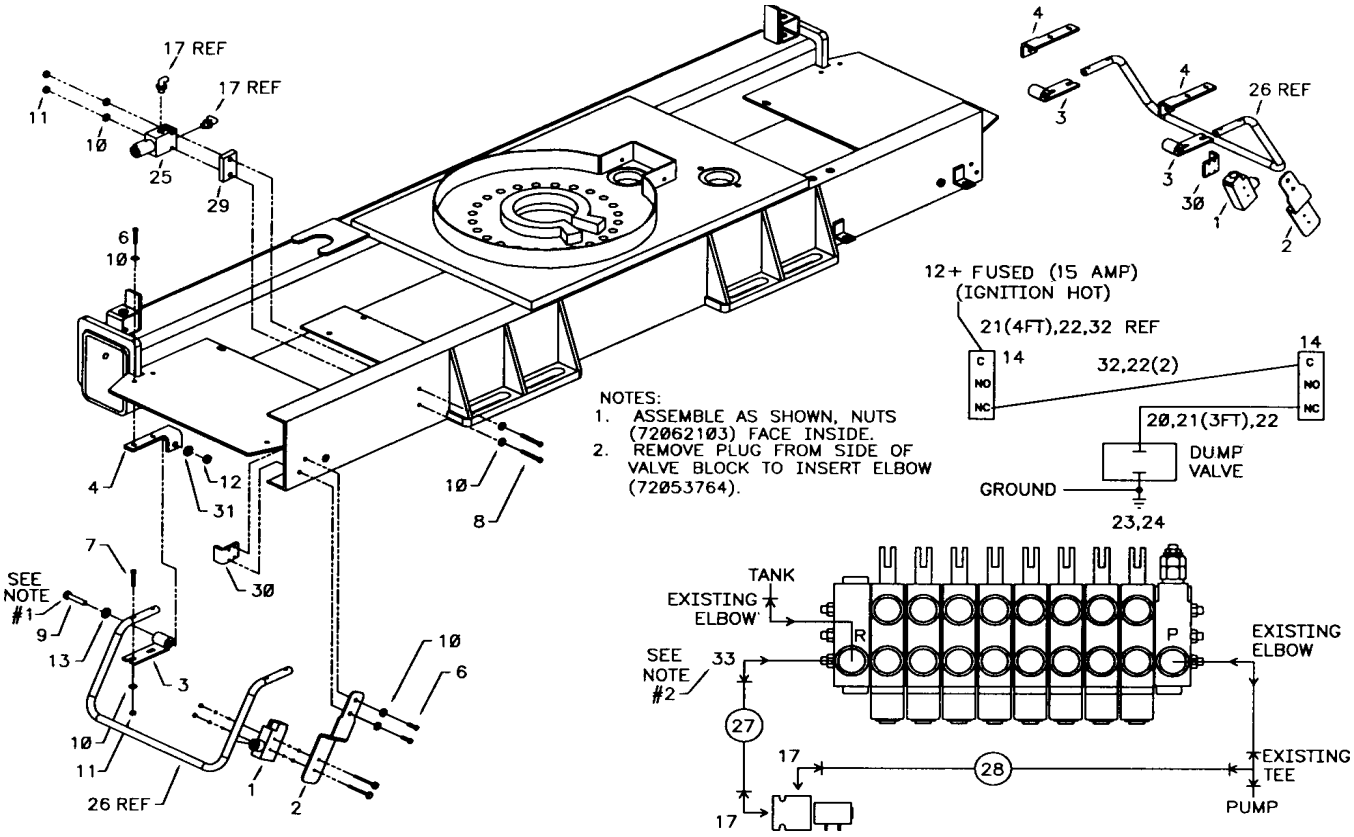

DECAL KIT (95712259)

1.	70029251	IMT DIAMOND	2
2.	70391583	DECAL-SETUP/STOW INSTR	2
3.	70391612	DECAL-GREASE WEEKLY LH	4
4.	70391613	DECAL-GREASE WEEKLY RH	4
5.	70392108	DECAL-SUCTION LINE	1
6.	70392109	DECAL-RETURN LINE	1
7.	71393822	DECAL-5200 SERIES IDENT	2
8.	70392213	DECAL-CAUTION WASH/WAX	1
9.	70392524	DECAL-ROTATE CRANE/GREASE	1
10.	70392813	DECAL-DANGER ELECTROCUTION	2
11.	70392814	DECAL-DANGER OPERATOR	2
12.	70392815	DECAL-DANGER OPERATION	2
13.	70392864	DECAL-DANGER STAND CLEAR	2
14.	70392865	DECAL-DANGER ELECTROCUTION	4
15.	70392866	DECAL-DANGER OPER COND	2
16.	70392867	DECAL-DANGER OR MOVING	2
17.	70392888	DECAL-DANGER OPER RESTRICT	2
18.	70392890	DECAL-DANGER STOW/UNFOLD	2
19.	70392891	DECAL-DANGER DRIVELINE	2
20.	70392982	DECAL-CONTACT IMT	1
21.	71039134	DECAL-CAUTION OIL LEVEL	2
22.	71393865	PLACARD-CAPACITY	2
23.	71392255	DECAL-CONTROL R	1
24.	71392256	DECAL-CONTROL L	1
25.	71392257	DECAL-OUTRGR PWR-DN R	1
26.	71392258	DECAL-OUTRGR PWR-DN L	1
27.	71392365	DECAL-ALIGNMENT CRANE ROT	1
28.	70392889	DECAL-DANGER RC ELECTRO	2
29.	70394190	DECAL-CAUTION NOT A STEP	2
30.	70394189	PLACARD-OIL RECS	1
31.	70392868	DECAL-DANGER CR LOADLINE	4
32.	70392863	DECAL-DANGER HOIST PERS	2
33.	70395323	DECAL-ASME/ANSI B30.22	1

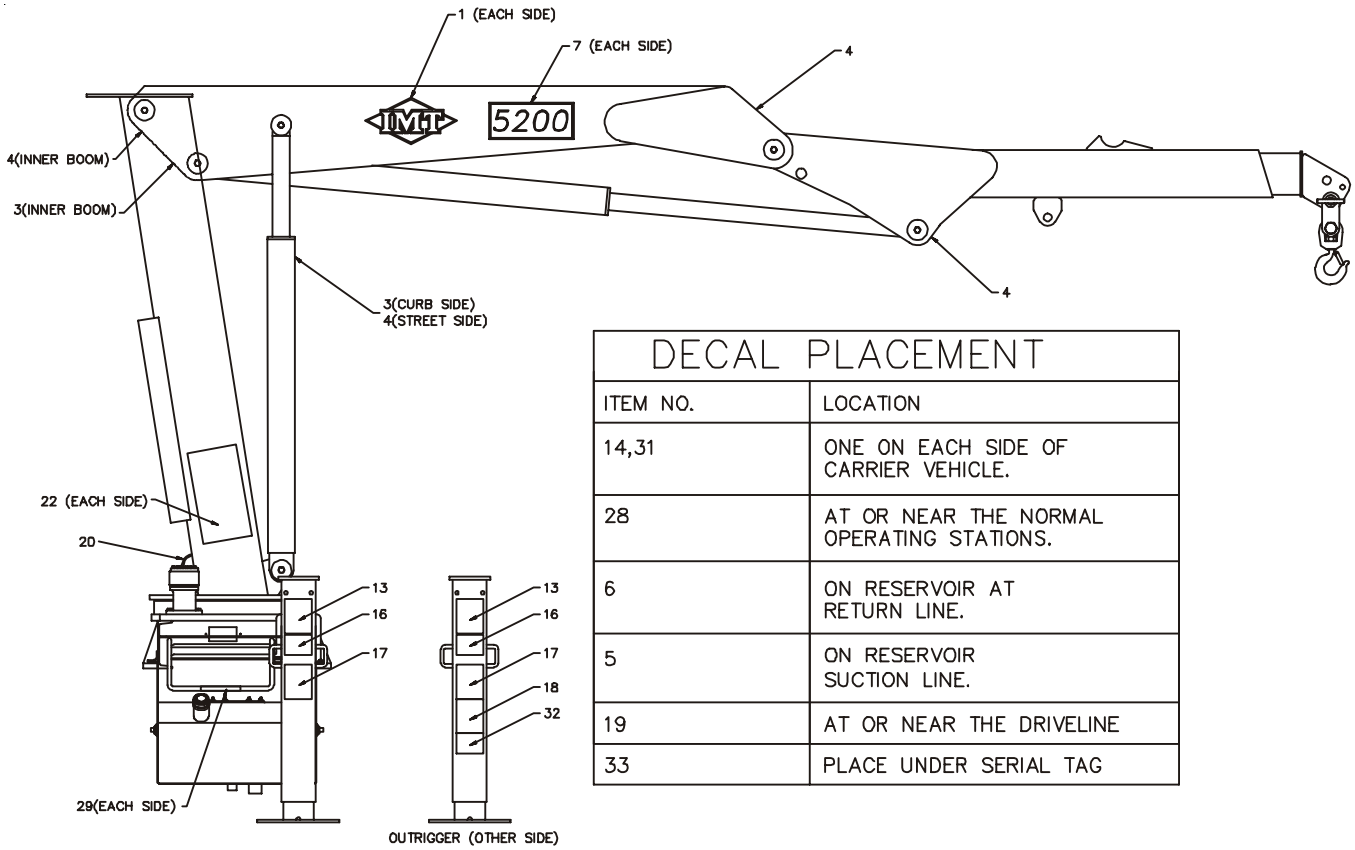

DECAL PLACEMENT	
ITEM NO.	LOCATION
14,31	ONE ON EACH SIDE OF CARRIER VEHICLE.
28	AT OR NEAR THE NORMAL OPERATING STATIONS.
6	ON RESERVOIR AT RETURN LINE.
5	ON RESERVOIR SUCTION LINE.
19	AT OR NEAR THE DRIVELINE
33	PLACE UNDER SERIAL TAG

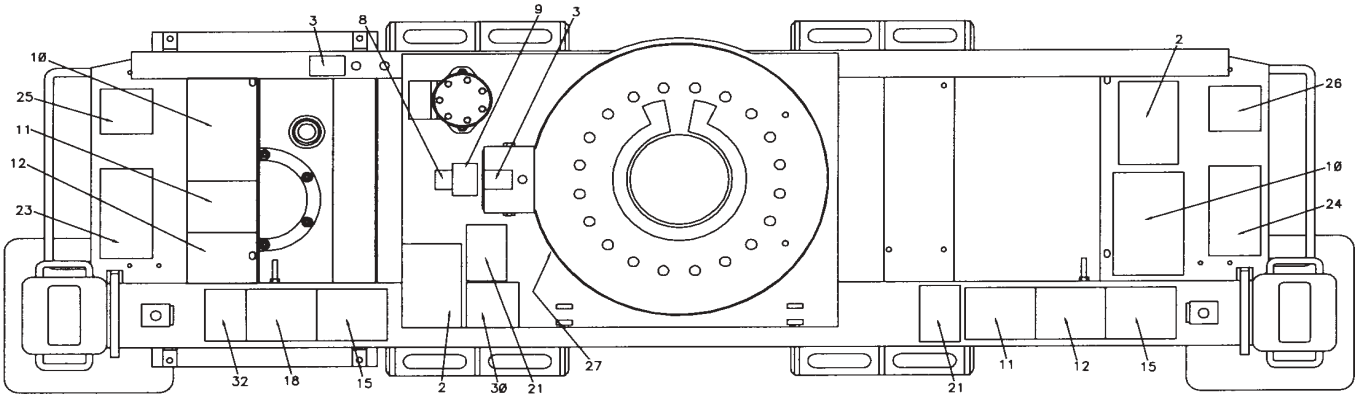

OPTION - LIGHT KIT (31717218)

ITEM	PART NO.	DESCRIPTION	QTY
1.	51717219	CABLE ASM- FLOOD LIGHTS	1
2.	60107762	GUARD	1
3.	77040424	FLOOD-LT-COMP WORK LAMP	2
4.	60103535	SWITCH BRACKET - 1 HOLE	1
5.	77041345	TOGGLE SWITCH	1
6.	77044574	CONNECTOR	2
7.	77044550	TERMINAL-F 18-20 GA	2
8.	70394069	SEAL CABLE CONNECTOR	4
9.	72063049	WASHER 1/4 LOCK	2
10.	72063051	WASHER 3/8 LOCK	2
11.	77040000	TERMINAL, RING #10 STUD 16-14	1
12.	89044274	WIRE-BLACK STRD TYPE	36”
13.	72060000	CAP SCR 1/4-20 X 1/2 HH GR5	2
14.	72060044	CAP SCR 3/8-16 X 3/4 HH GR5	2
15.	72062000	NUT 1/4-20 HEX ZINC	

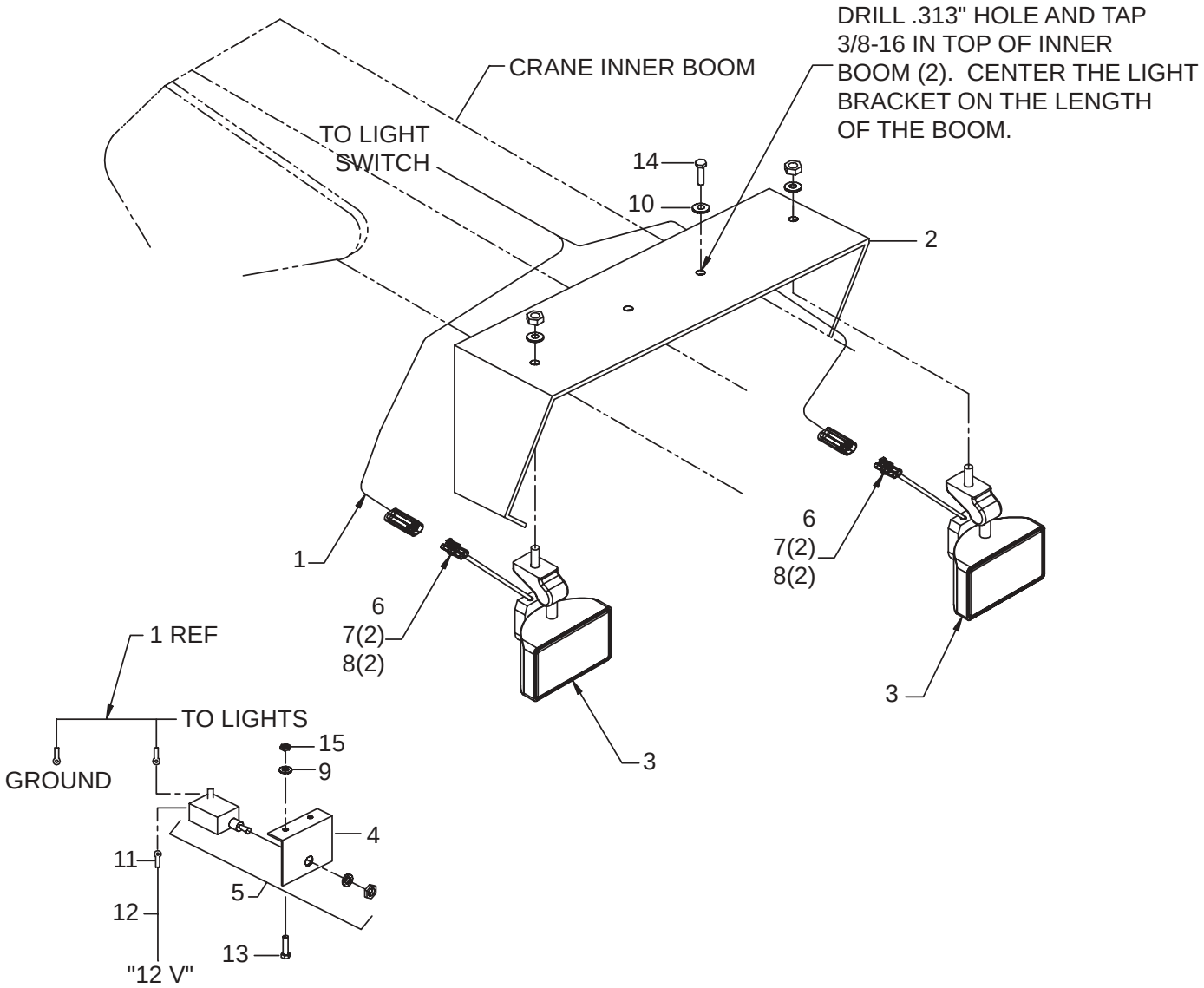

SECTION 4. GENERAL REFERENCE

NOTES

NOTICE

The user of this form is responsible in determining that these inspections satisfy all applicable regulatory requirements

Inspection Checklist

CRANES

1

REV: 6-18-99

OWNER/COMPANY	*TYPE OF INSPECTION (check one)* ☐ *DAILY (if deficiency found)* ☐ *QUARTERLY* ☐ *MONTHLY* ☐ *ANNUAL*
CONTACT PERSON	
CRANE MAKE & MODEL	*DATE INSPECTED*
CRANE SERIAL NUMBER	*HOUR METER READING (if applicable)*
UNIT I.D. NUMBER	*INSPECTED BY (print)*
LOCATION OF UNIT	*SIGNATURE OF INSPECTOR*

TYPE OF INSPECTION

NOTES:

Daily and monthly inspections are to be performed by a "designated" person, who has been selected or assigned by the employer or the employer's representative as being competent to perform specific duties.

Quarterly and annual inspections are to be performed by a "qualified" person who, by possession of a recognized degree in an applicable field or certificate of professional standing, or who, by extensive knowledge, training and experience has successfully demonstrated the ability to solve or resolve problems related to the subject matter and work.

One hour of normal crane operation assumes 20 complete cycles per hour. If operation exceeds 20 cycles per hour, inspection frequency should be increased accordingly.

Consult Operator / Service Manual for additional inspection items, service bulletins and other information.

Before inspecting and operating crane, crane must be set up away from power lines and leveled with outriggers fully extended.

DAILY (D): Before each day of operation, those items designated with a (**D**) must be inspected. This inspection need not be recorded unless a deficiency (✘) is found. If the end user chooses to record all daily inspections and those daily inspections include the monthly inspection requirements, there would be no need for a separate monthly inspection.

MONTHLY (M): Monthly inspections or 100 hours of normal operation (which ever comes first) includes all daily inspections plus items designated with an (**M**). This inspection must be recorded.

QUARTERLY (Q): Every three to four months or 300 hours of normal operation (which ever comes first) includes all daily and monthly inspection items plus items designated with a (**Q**). This inspection must be recorded.

ANNUAL (A): Each year or 1200 hours of normal operation (which ever comes first) includes all items on this form which encompasses daily, monthly and quarterly inspections plus those items designated by (**A**). This inspection must be recorded.

✔ = SATISFACTORY
✘ = DEFICIENCY (must be corrected prior to operation)
R = RECOMMENDATION (should be considered for corrective action)
NA = NOT APPLICABLE

FREQUENCY	ITEM	KEY	INSPECTION DESCRIPTION	STATUS ✔ , ✘ *R, NA*
D	1	Labels	All load charts, safety & warning labels, & control labels are present and legible.	
D	2		Check all safety devices for proper operation.	
D	3	Controls	Control mechanisms for proper operation of all functions, leaks & cracks.	
D	4	Station	Control and operator's station for dirt, contamination by lubricants, & foreign materials.	
D	5	Hyd System	Hydraulic system (hoses, tubes & fittings) for leakage & proper oil level.	
D	6	Hook	Presence & proper operation of hook safety latches.	
D	7	Rope	Proper reeving of wire rope on sheaves & winch drum.	
D	8	Pins	Proper engagement of all connecting pins & pin retaining devices.	
D	9	General	Overall observation of crane for damaged or missing parts, cracked welds & presence of safety covers.	
D	10	Operation	During operation, observe crane for abnormal performance, unusual wear (loose pins, wire rope damage, etc.). If observed, discontinue use & determine cause & severity of hazard.	
D	11	Remote Ctrls	Operate remote control devices to check for proper operation.	
D	12	Electrical	Operate all lights, alarms, etc. to check for proper operation.	
D	13	Anti 2-Blocking	Operate anti 2-blocking device to check for proper operation.	
D	14		Other	
D	15		Other	

Inspection Checklist — CRANES — 2

✔ = SATISFACTORY
✘ = DEFICIENCY (must be corrected prior to operation)
R = RECOMMENDATION (should be considered for corrective action)
NA = NOT APPLICABLE

FREQUENCY	ITEM	KEY	INSPECTION DESCRIPTION	STATUS ✔, ✘, R, NA
M	16	Daily	All daily inspection items.	
M	17	Cylinders	Visual inspection of cylinders for leakage at rod, fittings & welds. Damage to rod & case.	
M	18	Valves	Holding valves for proper operation.	
M	19	Valves	Control valve for leaks at fittings & between sections.	
M	20	Valves	Control valve linkages for wear, smoothness of operation & tightness of fasteners.	
M	21	General	Bent, broken or significantly rusted/corroded parts.	
M	22	Electrical	Electrical systems for presence of dirt, moisture & frayed wires.	
M	23	Structure	All structural members for damage.	
M	24	Welds	All welds for breaks & cracks.	
M	25	Pins	All pins for proper installation & condition.	
M	26	Hardware	All bolts, fasteners & retaining rings for tightness, wear & corrosion	
M	27	Wear Pads	Presence of wear pads.	
M	28	Pump & Motor	Hydraulic pumps & motors for leakage at fittings, seals & between sections.	
M	29	PTO	Transmission/PTO for leakage, abnormal vibration & noise.	
M	30	Hyd Fluid	Quality of hydraulic fluid and for presence of water.	
M	31	Hyd Lines	Hoses & tubes for leakage, abrasion damage, blistering, cracking, deterioration, fitting leakage & secured properly.	
M	32	Hook	Load hook for abnormal throat distance, twist, wear & cracks.	
M	33	Rope	Condition of load line.	
M	34	Manual	Presence of operator's manuals with unit.	
M	35		Other	
Q	36	Daily	All daily inspection items.	
Q	37	Monthly	All monthly inspection items.	
Q	38		Condition of wear pads	
Q	39	Rotation Sys	Rotation bearing for proper torque of all accessible mounting bolts.	
Q	40	Hardware	Base mounting bolts for proper torque.	
Q	41	Structure	All structural members for deformation, cracks & corrosion.	
	42		● Base	
	43		● Outrigger beams & legs	
	44		● Mast	
	45		● Inner boom	
	46		● Outer boom	
	47		● Extension(s)	
	48		● Jib boom	
	49		● Jib extension(s)	
	50		● Other	
Q	51	Hardware	Pins, bearings, shafts, gears, rollers, & locking devices for wear, cracks, corrosion & distortion.	
	52		● Rotation bearing(s)	
	53		● Inner boom pivot pin(s) & retainer(s)	
	54		● Outer boom pivot pin(s) & retainer(s)	
	55		● Inner boom cylinder pin(s) & retainer(s)	
	56		● Outer boom cylinder pin(s) & retainer(s)	
	57		● Extension cylinder pin(s) & retainer(s)	
	58		● Jib boom pin(s) & retainer(s)	
	59		● Jib cylinder pin(s) & retainer(s)	
	60		● Jib extension cylinder pin(s) & retainer(s)	
	61		● Boom tip attachments	
	62		● Other	
Q	63	Hyd Lines	Hoses, fittings & tubing for proper routing, leakage, blistering, deformation & excessive abrasion.	
	64		● Pressure line(s) from pump to control valve	
	65		● Return line(s) from control valve to reservoir	
	66		● Suction line(s) from reservoir to pump	
	67		● Pressure line(s) from control valve to each function	
	68		● Load holding valve pipe(s) and hose(s)	
	69		● Other	

Inspection Checklist — CRANES — 3

✔ = SATISFACTORY
✘ = DEFICIENCY (must be corrected prior to operation)
R = RECOMMENDATION (should be considered for corrective action)
NA = NOT APPLICABLE

FREQUENCY	ITEM	KEY	INSPECTION DESCRIPTION	STATUS ✔, ✘ R, NA
Q	70	Pumps, PTO's & Motors	Pumps, PTO's & motors for loose bolts/fasteners, leaks, noise, vibration, loss of performance, heating & excess pressure.	
	71		● Winch motor(s)	
	72		● Rotation motor(s)	
	73		● Other	
Q	74	Valves	Hydraulic valves for cracks, spool return to neutral, sticking spools, proper relief valve setting, relief valve failure.	
	75		● Main control valve	
	76		● Load holding valve(s)	
	77		● Outrigger or auxiliary control valve(s)	
	78		● Other	
	79		● Other	
Q	80	Cylinders	Hydraulic cylinders for drifting, rod seal leakage & leakage at welds. Rods for nicks, scores & dents. Case for damage. Case & rod ends for damage & abnormal wear.	
	81		● Outrigger cylinder(s)	
	82		● Inner boom cylinder(s)	
	83		● Outer boom cylinder(s)	
	84		● Extension cylinder(s)	
	85		● Rotation cylinder(s)	
	86		● Jib lift cylinder(s)	
	87		● Jib extension cylinder(s)	
	88		● Other	
Q	89	Winch	Winch, sheaves & drums for damage, abnormal wear, abrasions & other irregularities.	
Q	90	Hyd Filters	Hydraulic filters for replacement per maintenance schedule.	
A	91	Daily	All daily inspection items.	
A	92	Monthly	All monthly inspection items.	
A	93	Quarterly	All quarterly inspection items.	
A	94	Hyd Sys	Hydraulic fluid change per maintenance schedule.	
A	95	Controls	Control valve calibration for correct pressures & relief valve settings	
A	96	Valves	Safety valve calibration for correct pressures & relief valve settings.	
A	97	Valves	Valves for failure to maintain correct settings.	
A	98	Rotation Sys	Rotation drive system for proper backlash clearance & abnormal wear, deformation & cracks.	
A	99	Lubrication	Gear oil change in rotation drive system per maintenance schedule.	
A	100	Hardware	Check tightness of all fasteners and bolts.	
A	101	Wear Pads	Wear pads for excessive wear.	
A	102	Loadline	Loadline for proper attachment to drum.	

Deficiency / Recommendation / Corrective Action Report

DATE	OWNER	UNIT I.D. NUMBER

GUIDELINES

A. A deficiency (✘) may constitute a hazard. ✘ must be corrected and/or faulty parts replaced before resuming operation.
B. Recommendations (***R***) should be considered for corrective actions. Corrective action for a particular recommendation depends on the facts in each situation.
C. Corrective actions (***CA***), repairs, adjustments, parts replacement, etc. are to be performed by a qualified person in accordance with all manufacturer's recommendations, specifications and requirements.

NOTE: *Deficiencies (✘) listed must be followed by the corresponding corrective action taken (**CA**).*

✘ = DEFICIENCY *R* = RECOMMENDATION *CA* = CORRECTIVE ACTION TAKEN

✘, R, CA	ITEM #	EXPLANATION	DATE CORRECTED

Deficiency / Recommendation / Corrective Action Report (cont) 4

✘ , R, CA	ITEM #	EXPLANATION	DATE CORRECTED

If additional space is required, reproduce this page and attach to this report.

WIRE ROPE INSPECTION

Wire rope with any of the deficiencies shown below shall be removed and replaced immediately.

A. Corrosion can be cause for replacement. Any development of corrosion must be noted and monitored closely.

B. When there are either 3 broken wires in one strand or a total of six broken wires in all strands in any one rope lay.

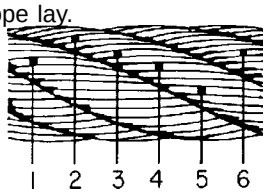

C. When flat spots on the outer wires appear and those outside wires are less than 2/3 the thickness of the unworn outer wire.

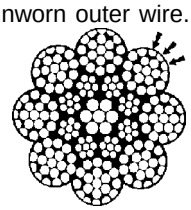

D. When there is a decrease of diameter indicating a core failure.

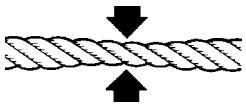

E. When kinking, crushing, birdcaging or other distortion occurs.

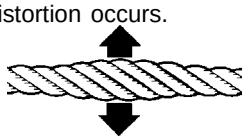

F. When there is noticeable heat damage (discoloration) of the rope by any means.

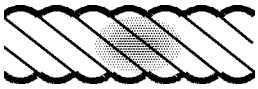

G. When the diameter is reduced from nominal size by 1/32" or more.

H. If a broken wire protrudes or loops out from the core of the rope.

HOOK INSPECTION

Hooks having any of the listed deficiencies shall be removed from service unless a qualified person approves their continued use and initiates corrective action. Hooks approved for continued use shall be subjected to periodic inspection.

A. DISTORTION

Bending / Twisting

A bend or twist exceeding 10° from the plane of the unbent hook.

Increased Throat Opening

HOOK WITHOUT LATCH: An increase in throat opening exceeding 15% (Or as recommended by the manufacturer)

HOOK WITH LATCH: An increase of the dimension between a fully-opened latch and the tip section of the hook exceeding 8% (Or as recommended by the manufacturer)

B. WEAR

If wear exceeds 10% of the original sectional dimension. (Or as recommended by the manufacturer)

C. CRACKS, NICKS, GOUGES

Repair of cracks, nicks, and gouges shall be carried out by a designated person by grinding longitudinally, following the contour of the hook, provided that no dimension is reduced more than 10% of its original value. (Or as recommended by the manufacturer) (A qualified person may authorize continued use if the reduced area is not critical.)

D. LATCH

Engagement, Damage & Malfunction

If a latch becomes inoperative because of wear or deformation, and is required for the service involved, it shall be replaced or repaired before the hook is put back into service. If the latch fails to fully close the throat opening, the hook shall be removed from service or “moused” until repairs are made.

E. HOOK ATTACHMENTS & SECURING MEANS

If any indication of distortion, wear, cracks, nicks or gouges are present, unless a qualified person authorizes their use. (Or as recommended by the manufacturer)

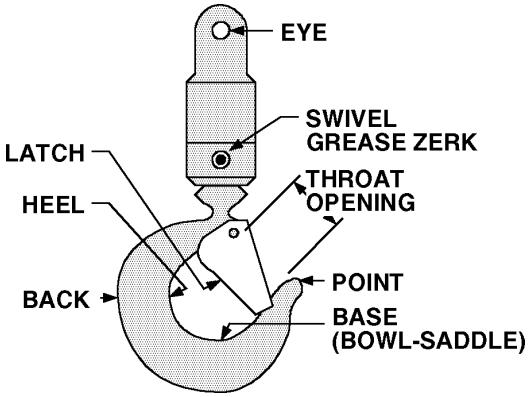

HOLDING VALVE INSPECTION

The cylinders are equipped with holding valves that prevent sudden movement of the cylinder rods in the event of a hydraulic hose or other hydraulic component failure. The valve is checked in the following manner:

1. With a full rated load, extend the cylinder in question and kill the engine.

2. Operate the control valve to retract the cylinder. If the cylinder “creeps”, replace the holding valve. If the cylinder does not “creep”, the valve is serviceable.

ANTI-TWO BLOCKING DEVICE INSPECTION
(See Vol. 1, Operation, Maintenance and Repair for a complete description)

The anti two block system should be checked daily as follows:

1. Examine flexible rod and weight to insure free unrestricted mechanical operation

2. Examine cord for damage, cuts or breaks. Grasp cord and pull to check operation of cord reel. The cord should retract on reel when released.

3. Start vehicle, engage PTO and slowly winch loadline up until anti-two block weight comes in contact with the hook end of the loadline cable. At the moment the weight is fully supported, a marked difference in winch operation should be noted. At this point, the winch up function should become very sluggish or non-functioning and have very little pull capability. Slowly increase truck engine speed while simultaneously actuating the winch up function. The winch characteristics should remain sluggish with little or no tensioning of the cable. If operation other than as described occurs, stop immediately and investigate. Failure to do so will risk damage to the cable or the crane.If all is well at this point, actuate the boom extend function slowly, and gradually increase to full actuation. Once again the function should be sluggish or non-existent with no tightening of the winch cable. If operation other than described occurs, stop immediately and reverse the function.

The final check involves actuating both the winch up and extend functions together and checking for proper operation of the anti two blocking circuit. Once again, start slowly and stop if it appears the cable is being tensioned.

If the anti two block function appears to be functioning normally, winch the cable down until the sensing weight swings free.

COARSE THREAD BOLTS

SIZE (DIA-TPI)	BOLT DIA (INCHES)	TIGHTENING TORQUE			
		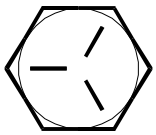 SAE J429 GRADE 5		 SAE J429 GRADE 8	
		PLAIN (FT-LBS)	PLATED (FT-LBS)	PLAIN (FT-LBS)	PLATED (FT-LBS)
5/16-18	0.3125	17	13	25	18
3/8-16	0.3750	31	23	44	33
7/16-14	0.4375	49	37	70	52
1/2-13	0.5000	75	57	105	80
9/16-12	0.5625	110	82	155	115
5/8-11	0.6250	150	115	220	160
3/4-10	0.7500	265	200	375	280
7/8-9	0.8750	395	295	605	455
1-8	1.0000	590	445	910	680
1 1/8-7	1.1250	795	595	1290	965
1 1/4-7	1.2500	1120	840	1815	1360
1 3/8-6	1.3750	1470	1100	2380	1780
1 1/2-6	1.5000	1950	1460	3160	2370

When using the torque data in the charts above, the following rules should be observed.

1. Bolt manufacturer’s particular specifications should be consulted when provided.
2. Flat washers of equal strength must be used.
3. All torque measurements are given in foot-pounds. To convert to inch-pounds, multiply by 12.
4. Torque values specified are for bolts with residual oils or no special lubricants applied. If special lubricants of high stress ability, such as Never-Seez compound graphite and oil, molybdenum disulphite, collodial copper or white lead are applied, multiply the torque values in the charts by the factor .90. The use of Loctite does not affect the torque values listed above.
5. Torque values for socket-head capscrews are the same as for Grade 8 capscrews.

WARNING

Anytime a gear-bearing bolt is removed, it must be replaced with a new bolt of the identical grade and size. Once a bolt has been torqued to 75% of its proof load and then removed, the torque coefficient may no longer be the same as when the bolt was new thus giving indeterminate clamp loads after torquing. Failure to replace gear-bearing bolts may result in bolt failure due to metal fatique causing serious injury or DEATH.

TORQUE DATA CHART - DOMESTIC

FINE THREAD BOLTS

SIZE (DIA-TPI)	BOLT DIA (INCHES)	TIGHTENING TORQUE			
		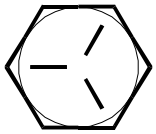 SAE J429 GRADE 5		 SAE J429 GRADE 8	
		PLAIN (FT-LBS)	PLATED (FT-LBS)	PLAIN (FT-LBS)	PLATED (FT-LBS)
5/16-24	0.3125	19	14	27	20
3/8-24	0.3750	35	26	49	35
7/16-20	0.4375	55	41	78	58
1/2-20	0.5000	90	64	120	90
9/16-18	0.5625	120	90	170	130
5/8-18	0.6250	170	130	240	180
3/4-16	0.7500	300	225	420	315
7/8-11	0.8750	445	325	670	500
1-12	1.0000	645	485	995	745
1 1/8-12	1.1250	890	670	1445	1085
1 1/4-12	1.2500	1240	930	2010	1510
1 3/8-12	1.3750	1675	1255	2710	2035
1 1/2-12	1.5000	2195	1645	3560	2670

COARSE THREAD BOLTS

SIZE (DIA-TPI)	BOLT DIA (INCHES)	TIGHTENING TORQUE			
		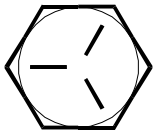 SAE J429 GRADE 5		 SAE J429 GRADE 8	
		PLAIN (FT-LBS)	PLATED (FT-LBS)	PLAIN (FT-LBS)	PLATED (FT-LBS)
5/16-18	0.3125	17	13	25	18
3/8-16	0.3750	31	23	44	33
7/16-14	0.4375	49	37	70	52
1/2-13	0.5000	75	57	105	80
9/16-12	0.5625	110	82	155	115
5/8-11	0.6250	150	115	220	160
3/4-10	0.7500	265	200	375	280
7/8-9	0.8750	395	295	605	455
1-8	1.0000	590	445	910	680
1 1/8-7	1.1250	795	595	1290	965
1 1/4-7	1.2500	1120	840	1815	1360
1 3/8-6	1.3750	1470	1100	2380	1780
1 1/2-6	1.5000	1950	1460	3160	2370

When using the torque data in the charts above, the following rules should be observed.

1. Bolt manufacturer's particular specifications should be consulted when provided.

2. Flat washers of equal strength must be used.

3. All torque measurements are given in foot-pounds. To convert to inch-pounds, multiply by 12.

4. Torque values specified are for bolts with residual oils or no special lubricants applied.
   If special lubricants of high stress ability, such as Never-Seez compound graphite and oil, molybdenum disulphite, collodial copper or white lead are applied, multiply the torque values in the charts by the factor .90. The use of Loctite does not affect the torque values listed above.

5. Torque values for socket-head capscrews are the same as for Grade 8 capscrews.

WARNING

Anytime a gear-bearing bolt is removed, it must be replaced with a new bolt of the identical grade and size. Once a bolt has been torqued to 75% of its proof load and then removed, the torque coefficient may no longer be the same as when the bolt was new thus giving indeterminate clamp loads after torquing. Failure to replace gear-bearing bolts may result in bolt failure due to metal fatique causing serious injury or DEATH.

TORQUE DATA CHART - METRIC

FINE THREAD BOLTS

SIZE (DIA-TPI)	BOLT DIA (INCHES)	TIGHTENING TORQUE			
		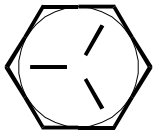 SAE J429 GRADE 5		 SAE J429 GRADE 8	
		PLAIN (KG-M)	PLATED (KG-M)	PLAIN (KG-M)	PLATED (KG-M)
5/16-24	0.3125	3	2	4	3
3/8-24	0.3750	5	4	7	5
7/16-20	0.4375	8	6	11	8
1/2-20	0.5000	12	9	17	12
9/16-18	0.5625	17	12	24	18
5/8-18	0.6250	24	18	33	25
3/4-16	0.7500	41	31	58	44
7/8-11	0.8750	62	45	93	69
1-12	1.0000	89	67	138	103
1 1/8-12	1.1250	123	93	200	150
1 1/4-12	1.2500	171	129	278	209
1 3/8-12	1.3750	232	174	375	281
1 1/2-12	1.5000	304	228	492	369

COARSE THREAD BOLTS

SIZE (DIA-TPI)	BOLT DIA (INCHES)	TIGHTENING TORQUE			
		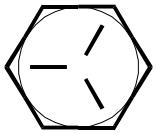 SAE J429 GRADE 5		 SAE J429 GRADE 8	
		PLAIN (KG-M)	PLATED (KG-M)	PLAIN (KG-M)	PLATED (KG-M)
5/16-18	0.3125	2	2	3	2
3/8-16	0.3750	4	3	6	5
7/16-14	0.4375	7	5	10	7
1/2-13	0.5000	10	8	15	11
9/16-12	0.5625	15	11	21	16
5/8-11	0.6250	21	16	30	22
3/4-10	0.7500	37	28	52	39
7/8-9	0.8750	55	41	84	63
1-8	1.0000	82	62	126	94
1 1/8-7	1.1250	110	82	178	133
1 1/4-7	1.2500	155	116	251	188
1 3/8-6	1.3750	203	152	329	246
1 1/2-6	1.5000	270	210	438	328

When using the torque data in the charts above, the following rules should be observed.

1. Bolt manufacturer's particular specifications should be consulted when provided.

2. Flat washers of equal strength must be used.

3. All torque measurements are given in kilogram-meters.

4. Torque values specified are for bolts with residual oils or no special lubricants applied.
   If special lubricants of high stress ability, such as Never-Seez compound graphite and oil, molybdenum disulphite, collodial copper or white lead are applied, multiply the torque values in the charts by the factor .90. The use of Loctite does not affect the torque values listed above.

5. Torque values for socket-head capscrews are the same as for Grade 8 capscrews.

WARNING

Anytime a gear-bearing bolt is removed, it must be replaced with a new bolt of the identical grade and size. Once a bolt has been torqued to 75% of its proof load and then removed, the torque coefficient may no longer be the same as when the bolt was new thus giving indeterminate clamp loads after torquing. Failure to replace gear-bearing bolts may result in bolt failure due to metal fatique causing serious injury or DEATH.

TURNTABLE BEARING FASTENER TIGHTENING SEQUENCE

Refer to the diagram below for proper tightening/torqueing sequence of the turntable bearing to the crane base and crane mast. The total quantity of cap screws varies dependent on crane model.

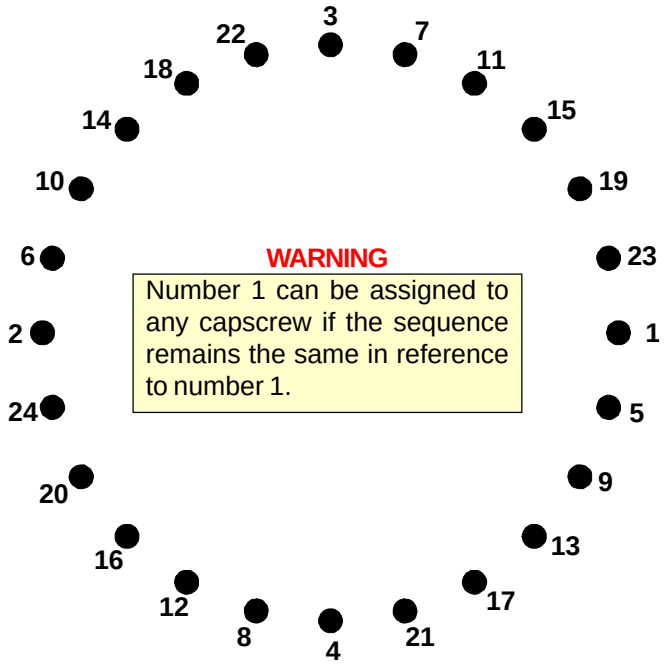

TIGHTENING PROCEDURE:

1. Refer to the Torque Data Chart to determine the proper torque value to apply to the size of capscrew used.

2. Follow the tightening sequence shown in the diagram. Note that the quantity of capscrews may differ from the diagram, but the sequence must follow the criss-cross pattern as shown in the diagram.

3. Torque all capscrews to approximately 40% of the specified torque value, by following the sequence.
   (EXAMPLE: .40 x 265 FT-LBS = 106 FT-LBS)
   (EXAMPLE-METRIC: .40 x 36 KG-M = 14.4 KG-M)

4. Repeat Step 3, but torqueing all capscrews to 75% of the specified torque value. Continue to follow the tightening sequence.
   (EXAMPLE: .75 x 265 FT-LBS = 199 FT-LBS)
   (EXAMPLE-METRIC: .75 x 36 KG-M = 27 KG-M)

5. Using the proper sequence, torque all capscrews to the listed torque value as determined from the Torque Data Chart.

TURNTABLE BEARING INSPECTION FOR REPLACEMENT

Before a bearing is removed from a crane for inspection, one of the following conditions should be evident:

1. Metal particles present in the bearing lubricant.
2. Increased drive power required to rotate the crane.
3. Noise emitting from the bearing during crane rotation.
4. Rough crane rotation.
5. Uneven or excessive wear between the pinion gear and turntable gear.

If none of the above conditions exists, the bearing is functioning properly and need not be replaced. But, if one or more of the above conditions exists, inspection may be required. Limits are measured in "TILT" which is dependent on the internal clearances of the bearing. TILT is the most practical determination of a bearings internal clearance once mounted on a crane.

Periodic readings indicating a steady increase in TILT may be an indicator of bearing wear. Note that a bearing found to have no raceway cracks or other structural irregularities should be reassembled and returned to service.

TEST PROCEDURE

STEP 1.
With the crane horizontal and fully extended, measure between the top and bottom mounting surfaces of the turntable bearing (A1), using a dial indicator for accuracy.

STEP 2.
Reverse the load by applying minimal downward pressure on the boom while the boom is in the boom support or on a solid surface. Again measure A2.

STEP 3.
Subtract A1 from A2 to determine tilt and compare the result with the accompanying chart.

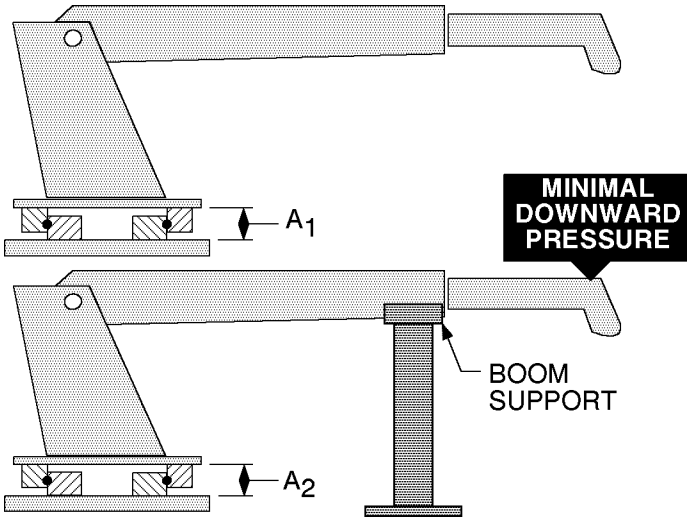

COMPARISON CHART - MODEL TO MEASURED TILT DIMENSION

NOTE THE FIGURES LISTED IN THIS CHART ARE SERVICE GUIDELINES AND DO NOT, IN THEMSELVES, REQUIRE THAT THE BEARING BE INSPECTED. IF THERE IS REASON TO SUSPECT AN EXCESS OF BEARING WEAR AND THE MEASURED TILT DIMENSION EXCEEDS THE DIMENSION LISTED, REMOVE THE BEARING FOR INSPECTION.	**IMT CRANE, LOADER OR TIREHAND MODEL**	1007 1014 1014A 1015 2015/2020 2109 3000 3816/3820 3016/3020 421/425 4300 5016/5020 6016/6020 TH7 BODY ROT'N TH1449 BODY ROT'N TH15B CLAMP TH2551B CLAMP TH2557A CLAMP	5200 5200R 5217 5800 7020 7025 7200 7415 9000 TH10 BODY ROT'N TH14 BODY ROT'N	16000 32018 32030 T30 T40	9800 12916 13031 13034 14000 15000 18000 20017 H1200 H1200RR T50 TH2551B BODY ROT'N TH2557B BODY ROT'N TH2557A BODY ROT'N
	BALL DIA. (REF)	.875" (22mm)	1.00" (25mm)	1.18"-1.25" (30-32mm)	1.75" (44mm)
	TILT DIM. (A_1-A_2)	**.060" (1.524mm)**	**.070" (1.778mm)**	**.075" (1.905mm)**	**.090" (2.286mm)**

20000710

The information within this manual has been compiled and checked but errors do occur. To provide our customers with a method of communicating those errors we have provided the Manual Change Request form below. In addition to error reporting, you are encouraged to suggest changes or additions to the manual which would be of benefit to you. We cannot guarantee that these additions will be made but we do promise to consider them. When completing the form, please write or print clearly. Submit a copy of the completed form to the address listed below.

MANUAL CHANGE REQUEST

DATE	PRODUCT MANUAL	MANUAL PART NO.
SUBMITTED BY		
COMPANY		
ADDRESS		
CITY, STATE, ZIP		
TELEPHONE		

☐ ERROR FOUND

LOCATION OF ERROR (page no.): _____

DESCRIPTION OF ERROR: _____

☐ ERROR FOUND

DESCRIPTION OF ADDITION: _____

REASON FOR ADDITION: _____

MAIL TO:

IOWA MOLD TOOLING CO., INC.

BOX 189

GARNER, IA 50438-0189

ATTN: Technical Publications

20000710

IOWA MOLD TOOLING CO., INC.
BOX 189, GARNER, IA 50438-0189
TEL: 641-923-3711
TECHNICAL SUPPORT FAX: 641-923-2424
www.imt.com